Atlas Copco

Dry claw vacuum & overpressure pumps

DZS 065V, DZS 150V, DZS 300V
DZS 150P, DZS 300P

Instruction Book

6996 0223 70
Issue B

This page has been intentionally left blank.

Atlas Copco

Dry claw vacuum & overpressure pumps

DZS 065V, DZS 150V, DZS 300V
DZS 150P, DZS 300P

Instruction book

Original instructions

Copyright notice
Any unauthorized use or copying of the contents or any part thereof is prohibited. This applies in particular to trademarks, model denominations, part numbers and drawings. This instruction book is valid for CE as well as non-CE labelled machines. It meets the requirements for instructions specified by the applicable European directives as identified in the Declaration of Conformity.

2017-11

No. 6996 0223 70 Issue B

www.atlascopco.com

This page has been intentionally left blank

Table of contents

1 SAFETY PRECAUTIONS 7

1.1 Safety icons 7

1.2 Safety precautions, general 7

1.3 Safety precautions during installation 8

1.4 Safety precautions during operation 9

1.5 Safety precautions during maintenance or repair 10

2 GENERAL DESCRIPTION 11

2.1 What is vacuum and how is flow rate understood 11

2.2 Introduction 12

2.3 Flow diagram 17

2.4 Condensate system 20

3 INSTALLATION 21

3.1 Dimension drawings 21

3.2 Installation proposal 26

3.3 Electrical connections 31

3.4 Pictographs 32

4 OPERATING INSTRUCTIONS 33

4.1 Initial start-up 33

4.2 Starting 34

4.3 During operation 34

4.4 Stopping 35

4.5 Taking out of operation 35

5 MAINTENANCE 36

5.1 Preventive maintenance schedule 36

5.2 Oil specifications 38

5.3 Storage 38

5.4 Disposal of used material 38

6 ADJUSTMENTS AND SERVICING PROCEDURES 39

6.1 Air filter 39

6.2 Oil top-up 40

6.3 Cleaning motor fan and vent holes 40

7 PROBLEM SOLVING 41

8 TECHNICAL DATA 43

8.1 Reference conditions and limitations 43

8.2 Pump data 44
8.3 Motor data 45
8.4 Electric cable size and fuses 46

9 INSTRUCTIONS FOR USE 52

10 DECLARATION OF CONFORMITY 53

1 Safety precautions

1.1 Safety icons

Explanation

	Danger to life
	Warning
	Important note

1.2 Safety precautions, general

1. The operator must employ safe working practices and observe all related work safety requirements and regulations.
2. If any of the following statements does not comply with the applicable legislation, the stricter of the two shall apply.
3. Installation, operation, maintenance and repair work must only be performed by authorized, trained, specialized personnel.
4. This claw pump is primarily designed for the handing of clean and dry air but inevitably it may be subjected to dirty and wet applications. If operating in aggressive, toxic, explosive and possibly dangerous conditions for the pump and operators, consult Atlas Copco.
5. Before any maintenance, repair work, adjustment or any other non-routine checks,
   - Stop the pump.
   - Press the emergency stop button.
   - Switch off the voltage.
   - Make sure that the pump system is at atmospheric pressure level.
   - Lock Out - Tag Out (LOTO):
     - Open the power isolating switch and lock it with a personal lock.
     - Tag the power isolating switch with the name of the service technician.
   - The units may be powered by a frequency converter. Wait 10 minutes after power down before starting any electrical repair.
   - Never rely on indicator lamps or electrical door locks before maintenance work, always disconnect and check with measuring device.

	In a domestic environment, this product may cause radio interference in which case supplementary mitigation measures are required.

	If the machine is equipped with an automatic restart after voltage failure function and if this function is active, be aware that the machine will restart automatically when the power is restored if it was running when the power was interrupted!

6. Avoid contact with pump intake during operation.
7. The owner is responsible for maintaining the unit in safe operating condition. Parts and accessories shall be replaced if unsuitable for safe operation.

8. It is not allowed to walk or stand on the unit or on its components.
9. Never block the outlet in case the pump is used as a vacuum pump.

1.3 Safety precautions during installation

⚠	All responsibility for any damage or injury resulting from neglecting these precautions, or non-observance of the normal caution and care required for installation, operation, maintenance and repair, even if not expressly stated, will be disclaimed by the manufacturer.

1. The machine must only be lifted using suitable lifting equipment in accordance with the applicable safety regulations. Loose or pivoting parts must be securely fastened before lifting. It is strictly forbidden to dwell or stay in the risk zone under a lifted load. Lifting acceleration and deceleration must be kept within safe limits. Wear a safety helmet when working in the area of overhead or lifting equipment.
2. The unit is designed for indoor use. If the unit is installed outdoors, special precautions must be taken; consult Atlas Copco.
3. Place the machine where the ambient air is as cool and clean as possible. Never obstruct the cooling air inlet. Water handling capacity is limited. For operating in such applications, consult Atlas Copco.
4. Any blanking flanges, plugs, caps and desiccant bags must be removed before connecting the pipes.
5. All connections must be of correct size and suitable for working pressure and temperature. Never use frayed, damaged or worn hoses. Distribution pipes and connections must be of the correct size and suitable for the working pressure and temperature.
6. The aspirated air must be free of flammable fumes, vapors and particles, for example, paint solvents that can lead to internal fire or explosion. Follow the material safety.
7. Arrange the air intake so that loose clothing worn by people cannot be sucked in.
8. Ensure no external force exerted on the inlet and outlet connection. The connection pipes must be free of strain. No supports may be fixed to the canopy of the machine.
9. If remote control is installed, the machine must bear a clear sign stating:

   DANGER: This machine is remotely controlled and may start without warning.

   The operator has to make sure that the machine is stopped and that isolating switch is open and locked before any maintenance or repair. As a further safeguard, persons switching on remotely controlled machines shall take adequate precautions to ensure that there is no one checking or working on the machine. To this end, a suitable notice shall be affixed to the starting equipment.
10. Air-cooled machines must be installed in such a way that an adequate flow of cooling air is available and that the exhausted air does not recirculate to the vacuum/over-pressure pump air inlet of the vacuum relief valve or cooling air inlet.
11. The electrical connections must correspond to the applicable codes. The machines must be earthed and protected against short circuits by fuses in all phases. A lockable power isolating switch must be installed near the vacuum/over-pressure pump.
12. On machines with automatic start/stop system or if the automatic restart function after voltage failure is activated, a sign stating “This machine may start without warning” must be affixed near the instrument panel.
13. In multiple vacuum/over-pressure pump systems, manual valves must be installed to isolate each pump. Non-return valves (check valves) must not be relied upon for isolating multiple systems.
14. Never remove or tamper with the safety devices, guards or insulation fitted on the machine.
15. Piping or other parts with a temperature that exceeds 70°C (158°F) and which may be accidentally touched by personnel in normal operation must be guarded or insulated. Other high temperature piping must be clearly marked.
16. If the ground is not leveled or can be subject to variable inclination, consult the manufacturer.
17. Whenever air containing hazardous substances are sucked in (that is, biological or microbiological agents), use abatement systems placed upstream of the vacuum/over-pressure pump.
18. Any pump placed in an application with inlet gas stream temperatures above the published maximum temperature should be approved by Atlas Copco prior to start-up.

	Also consult following safety precautions: Safety precautions during operation and Safety precautions during maintenance. These precautions apply to machinery processing or consuming air or inert gas. Processing of any other gas requires additional safety precautions typical to the application which are not included herein. Some precautions are general and cover several machine types and equipment; hence some statements may not apply to your machine.

1.4 Safety precautions during operation

	All responsibility for any damage or injury resulting from neglecting these precautions, or non-observance of the normal caution and care required for installation, operation, maintenance and repair, even if not expressly stated, will be disclaimed by the manufacturer.

1. Never touch any piping or components of the pump during operation.
2. Use only the correct type and size of hose end fittings and connections. Make sure that a hose is fully depressurized before disconnecting it.
3. Persons switching on remotely controlled machines shall take adequate precautions to ensure that there is no one checking or working on the machine. To this end, a suitable notice shall be affixed to the remote start equipment.
4. Never operate the machine when there is a possibility of taking inflammable or toxic fumes, vapors or particles.
5. Never operate the machine below or in excess of its limit ratings.
6. Keep all bodywork panels shut during operation. The panels may be opened for short periods only, for example, to carry out routine checks. Wear ear protectors when opening a panel. On vacuum/over-pressure pumps without bodywork, wear ear protection in the vicinity of the machine.
7. People staying in environments or rooms where the sound pressure level reaches or exceeds 80 dB(A) shall wear ear protectors.
8. Periodically check that:
   - All guards are in place and securely fastened
   - All hoses and/or pipes inside the machine are in good condition, secure and not rubbing
   - There are no leaks
   - All fasteners are tight
   - All electrical leads are secure and in good order
   - Air inlet valve and air net, that is pipes, couplings, manifolds, valves, hoses, and so on are in good repair, free of wear or abuse
9. If warm cooling air from vacuum pumps is used in air heating systems, e.g. to warm up a workroom, take precautions against air pollution and possible contamination of the breathing air.
10. Do not remove any of, or tamper with, the sound-damping material.
11. Never remove or tamper with the safety devices, guards or insulation fitted on the machine.
12. Do not change the purpose of the pump. If the pump is configured to be used as a vacuum pump, do not use the pump as an over-pressure pump. If the pump has been configured to be used as an over-pressure pump, do not use the pump as a vacuum pump.
13. Never run the over-pressure pump without the air intake filter mounted. For the vacuum pump, Atlas Copco recommends to install an air intake filter to safeguard the pump. Consult Atlas Copco to check whether the application for the vacuum pump requires and air intake filter.

	Also consult following safety precautions: Safety precautions during installation and Safety precautions during maintenance. These precautions apply to machinery processing or consuming air or inert gas. Processing of any other gas requires additional safety precautions typical to the application which are not included herein. Some precautions are general and cover several machine types and equipment; hence some statements may not apply to your machine.

1.5 Safety precautions during maintenance or repair

	All responsibility for any damage or injury resulting from neglecting these precautions, or non-observance of the normal caution and care required for installation, operation, maintenance and repair, even if not expressly stated, will be disclaimed by the manufacturer.

1. Always use the correct safety equipment (such as safety glasses, gloves, safety shoes, and so on).
2. Use only the correct tools for maintenance and repair work.
3. Use only genuine spare parts.
4. All maintenance work shall only be undertaken when the machine has cooled down.
5. A warning sign bearing a legend such as “Work in progress; do not start” shall be attached to the starting equipment.
6. Persons switching on remotely controlled machines shall take adequate precautions to ensure that there is no one checking or working on the machine. To this end, a suitable notice shall be affixed to the remote start equipment.
7. Before removing any component, effectively isolate the machine from all sources of under- and/or overpressure and make sure that the pump system is at atmospheric pressure level.
8. Never use flammable solvents or carbon tetrachloride for cleaning parts. Take safety precautions against toxic vapors of cleaning liquids.
9. Carefully observe cleanliness during maintenance and repair. Keep dirt away by covering the parts and exposed openings with a clean cloth, paper or tape.
10. Never weld or perform any operation involving heat near the oil system.
11. Whenever there is an indication or any suspicion that an internal part of a machine is overheated, the machine shall be stopped but no inspection covers shall be opened before sufficient cooling time has elapsed; this to avoid the risk of spontaneous ignition of the oil vapor when air is admitted.
12. Never use a light source with open flame for inspecting the interior of a machine, pressure vessel, and so on.
13. Make sure that no tools, loose parts or rags are left in or on the machine.
14. All regulating and safety devices shall be maintained with due care to ensure that they function properly. They may not be put out of action.
15. Before clearing the machine for use after maintenance or overhaul, check that operating pressures, temperatures and time settings are correct. Check that all control and shut-down devices are fitted and that they function correctly. If removed, check that the coupling guard of the vacuum/over-pressure pump drive shaft has been reinstalled.
16. Protect the motor, air filter, electrical and regulating components, and so on to prevent moisture from entering them, for example when steam cleaning.
17. Make sure that all sound-damping material and vibration dampers, for example, damping material on the bodywork and in the air inlet and outlet systems of the pump, is in good condition. If damaged, replace it by genuine material from the manufacturer to prevent the sound pressure level from increasing.
18. Never use caustic solvents which can damage materials of the air net, e.g. polycarbonate bowls.
19. Faults or wearing of seals may cause oil lubricant leaks. Avoid dispersion in soil and pollution of other materials.

	Also consult following safety precautions: Safety precautions during operation and Safety precautions during installation. These precautions apply to machinery processing or consuming air or inert gas. Processing of any other gas requires additional safety precautions typical to the application which are not included herein. Some precautions are general and cover several machine types and equipment; hence some statements may not apply to your machine.

2 General description

2.1 What is vacuum and how is flow rate understood

What is vacuum and how to denote

A vacuum is any pressure in a system that is below the ambient atmospheric pressure. It can be denoted in absolute terms or in effective (gauge) terms:

- mbar(a) - Absolute pressure - denotes how much the pressure is above absolute zero vacuum.
- (minus) mbar(e) - The Effective or Gauge pressure - denotes how much the pressure is below local atmospheric pressure

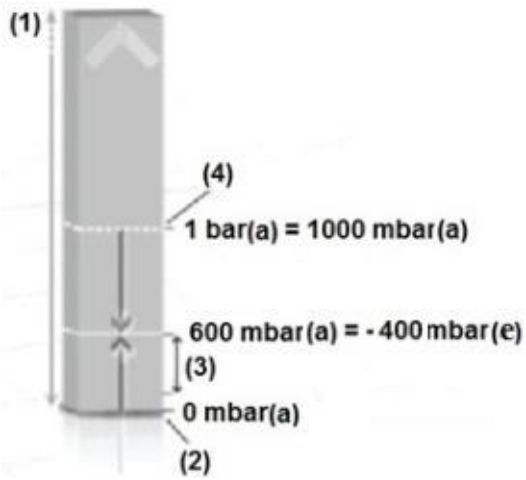

(1)	Pressure
(2)	Absolute vacuum
(3)	Typical DZS claw pump working range 600 mbar(a) (450 Torr(a)) – 150 mbar(a) (112.5 Torr(a))
(4)	Atmospheric pressure

Atmospheric pressure at sea level is roughly 1 bar or 1000 mbar (750 Torr). A typical working range for the DZS claw pumps is 600 mbar(a) (450 Torr(a)) to 150 mbar(a) (112.5 Torr(a)). From the illustration it can be seen clearly that this range is also equivalent to - 400 mbar(e) (-300 Torr(e)) to - 850 mbar(e) (-637.6 Torr(e)).

It is important to understand which type of reference is required before selecting a pressure instrument for measuring the vacuum. It must be noted that the distinction doesn't matter for a pressure difference (delta P; for example, pressure loss), since it is always the result of subtracting 2 pressures (whether stated as absolute or effective pressures).

Flow rate definitions

There are two common but different ways to denote flow rate in vacuum. The first one is based on the displacement or volumetric flow rate and the second one is based on the throughput or mass flow rate. Atlas Copco vacuum pumps use volumetric flow rate to denote performance, the unit being Am^3/hr.

Displacement/volumetric flow rate

For the relevant pressure range, when a DZS claw pump operates at quasi constant motor speed (rotations per minute) and since the compression chambers have fixed dimensions, the same volume of air is pumped from inlet to outlet with falling pressure level. Over the relevant pressure range, this makes the volumetric flow rate quasi-independent of the vacuum level. It is the expression of the flow rate inside the piping at the governing vacuum level (Am^3/hr), and always higher than the throughput in mass flow rate.

Throughput in mass flow rate

Even if the volumetric flow rate is quasi unchanged with falling pressure level, the number of molecules in that pumped volume is not. By definition: the deeper the vacuum, the lower the amount of molecules in the same volume of air. This means that the mass flow will decrease with decreasing (absolute) pressure. It is clear that a flow rate must be stated at a certain vacuum level when using this denotation.

2.2 Introduction

The DZS series claw pumps are single-stage, dry vacuum and over-pressure pumps driven by an electric motor. The vacuum and over-pressure pumps are air-cooled.
The pump is designed to be run as a vacuum pump or an over-pressure pump dependent upon its configuration.
The pump is specifically designed to work with clean air, inert gas or small amounts of water vapor. The ambient temperature must be between 0 °C to 40 °C.
These pumps are enclosed in a sound-insulated bodywork to aid noise reduction, cleanliness and heat transfer.
The DZS claw pump robust design ensures complete flexibility and quick access to all parts. The claw pump mainly includes dry claw element, gearbox, electric motor and drive train all mounted on a common base frame.

Element
The pumping chamber consist of duplex set of rotating claws / rotors on cantilevered shafts. The two claws and the cylinder are all non-touching but have accurate clearances to allow a very efficient performance.
The main chamber is completely lubrication free and designed with corrosion resistant materials. The whole assembly is referred to as an element.

Inlet non-return valve

Inlet non-return valve prevents reverse flow of inlet air and thus prevents reverse rotation of the pump.

Gearbox
The element is driven through an oil lubricated gearbox housing synchro-meshing gears which in-turn is coupled to a direct drive motor.

Electric motor
Electric motors are 3 phase ‘multi voltage/multi frequency’. For 60Hz supplies they are cUL/UL approved. The main motor options are:

- 200/230V 50/60Hz
- 400V 50Hz
- 380V 60Hz
- 500V 50Hz and 575 60Hz
- 460V 60Hz
- 230/460V 60Hz (Optional)

The motors are suited to operate with Variable Speed Drive to have complete controllability and to reduce power consumption. This efficiency improvement leads to power reduction and consequently a lower carbon footprint.

Following standard features provided with the pump:

- **Vacuum relief valve (In case of vacuum pump)**
  The relief valve is designed to open at a predetermined set pressure to protect the pump from damage.
  When the vacuum level is exceeded, the relief valve opens and allows air to enter the pumping chamber. This has the effect of internal cooling.

- **Intake filter (In case of over-pressure pump)**
  Intake filter prevents foreign material from entering the pump. Abrasive, bulky material will damage the pump’s internal parts and could cause catastrophic failure.

- **Silencer (Extra inlet silencer in case of over-pressure pump)**
  The pump inlet and discharge can be noisy. The pump is equipped with an outlet silencer.
  For the over-pressure pump an extra inlet silencer is installed.

- **Pressure Safety valve (In case of over-pressure pump)**
  A pressure safety valve automatically releases air from a pump, when the pressure exceeds preset limits.

The following features are available as an option:

- **Humid Option (In case of vacuum pump)**
  'Standard' and 'Humid' versions are available dependent upon the harshness of the application.
  The harsh applications, generally wet application need more protection for the pump. 'Humid' version contains advanced corrosion resistant wetted parts.
  In addition to this, pump is provided with inlet liquid separator, condensate drain facility and corrosion resistive coating to the exhaust to withstand the harsh applications.

General views of Dry claw vacuum and overpressure pumps

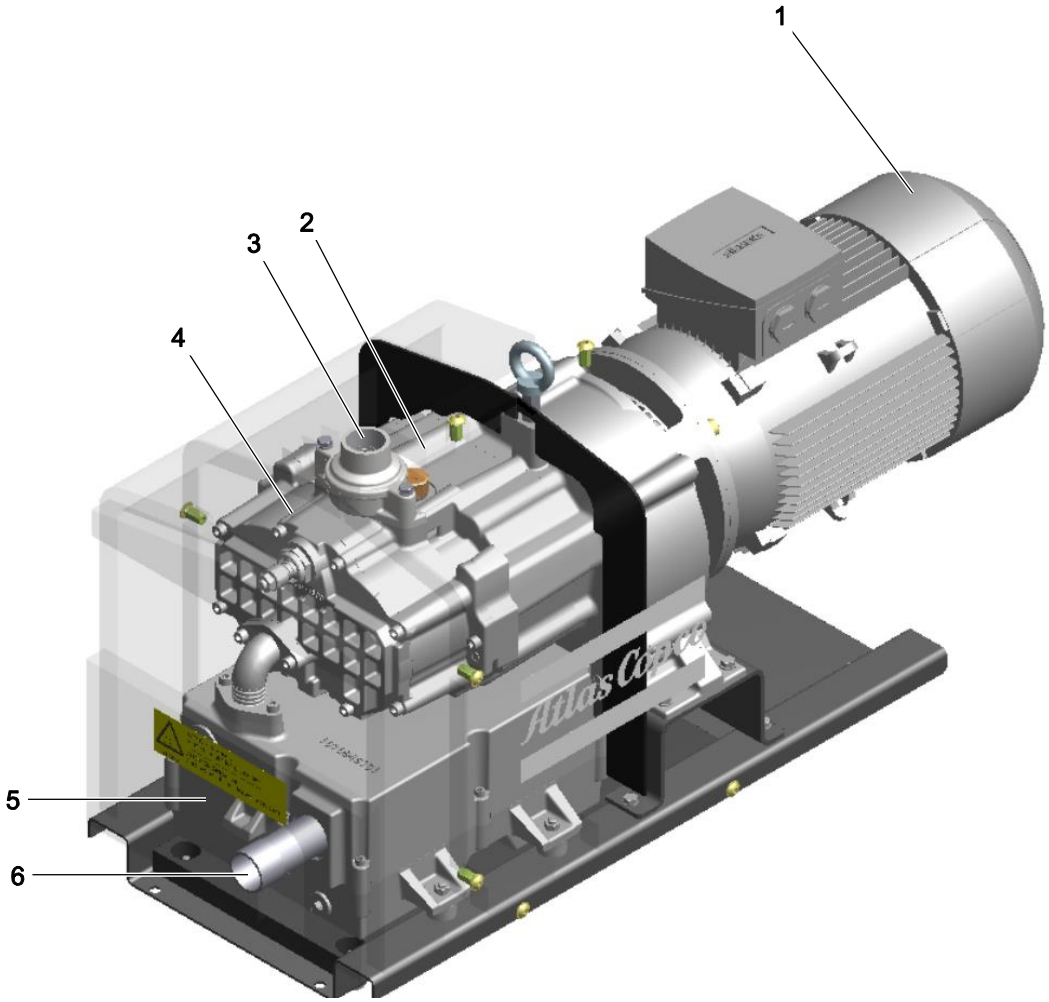

DZS 065V, DZS 150V, DZS 300V Dry claw vacuum pumps back view

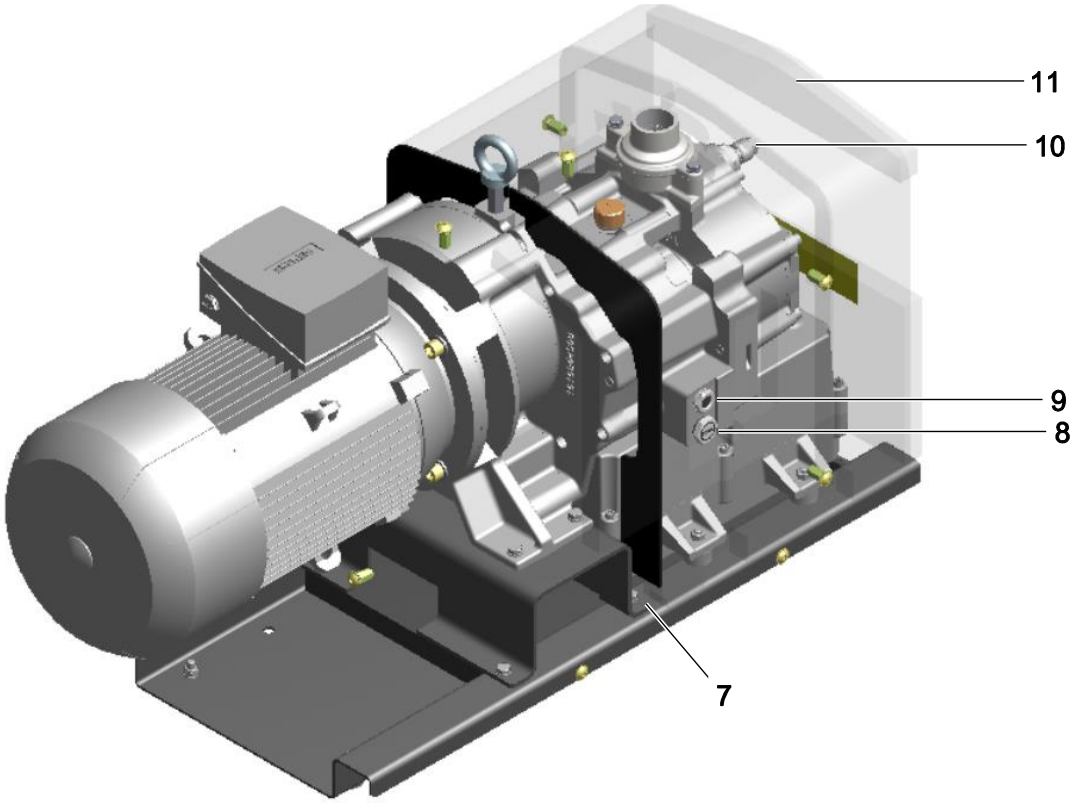

DZS 065V, DZS 150V, DZS 300V Dry claw vacuum pumps front view

Reference	Name
1	Drive motor (Fixed speed or inverter driven)
2	Gearbox
3	Inlet Non Return valve
4	Element
5	Exhaust silencer
6	Air outlet
7	Base frame
8	Oil drain plug
9	Oil sight glass
10	Vacuum relief valve
11	Noise reducing canopy

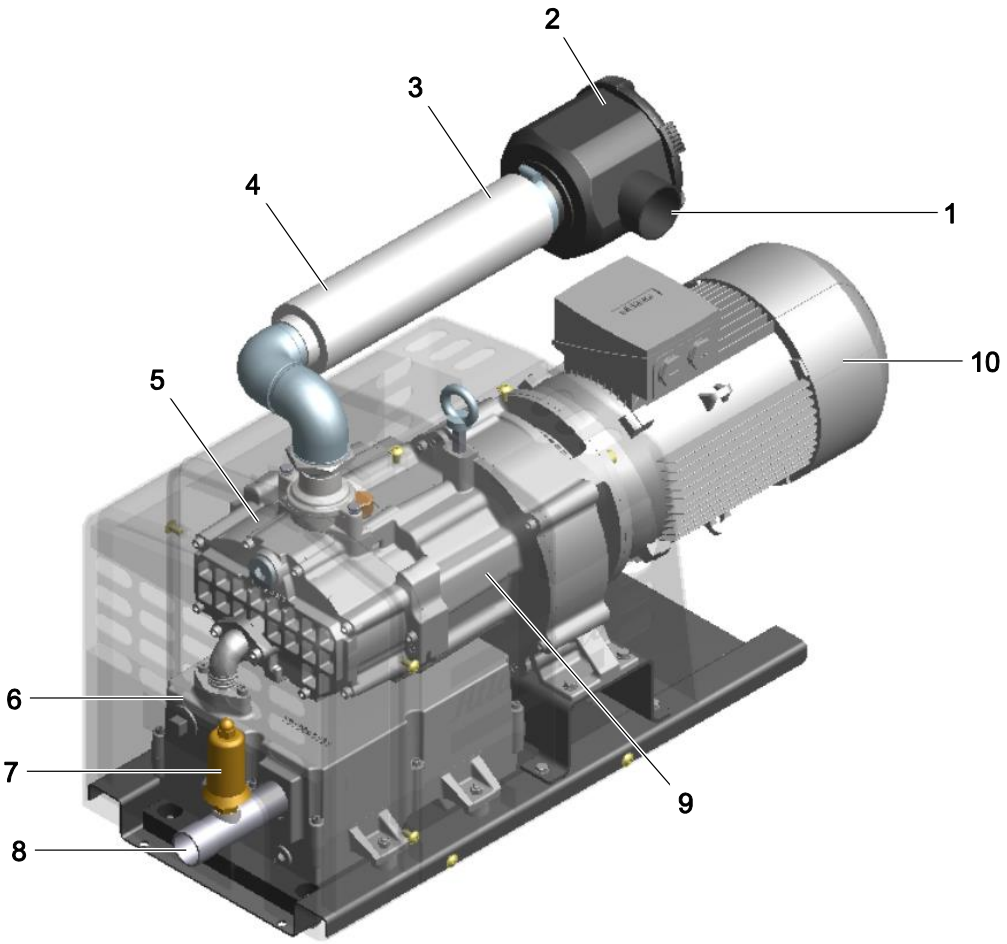

DZS 150P, DZS 300P Dry claw overpressure pumps back view

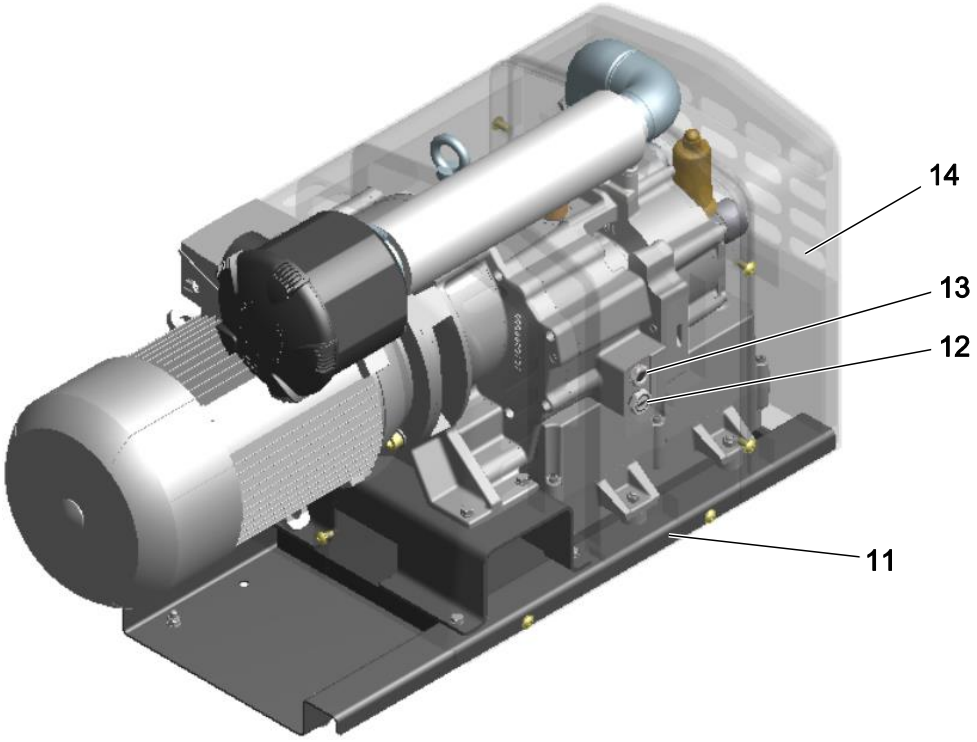

DZS 150P, DZS 300P Dry claw overpressure pumps front view

Reference	Name
1	Air inlet
2	Air intake filter
3	Inlet silencer
4	Inlet Non Return valve
5	Element
6	Exhaust silencer
7	Pressure Safety valve
8	Air outlet
9	Gearbox
10	Drive motor (Fixed speed or inverter driven)
11	Base frame
12	Oil drain plug
13	Oil sight glass
14	Noise reducing canopy

2.3 Flow diagram

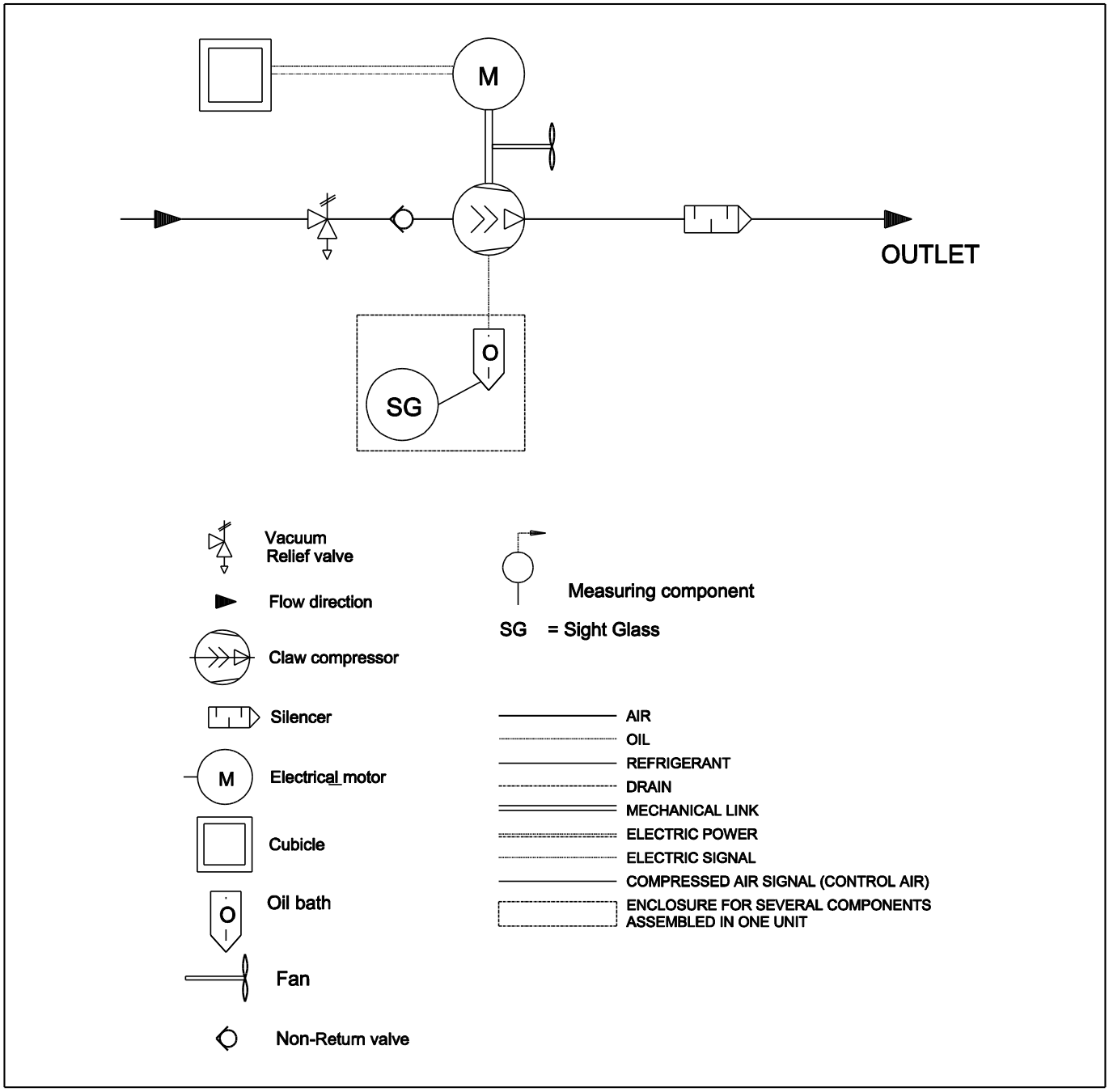

Flow diagram - DZS 065V, DZS 150V, DZS 300V Dry claw vacuum pumps

Vacuum Pump

Air comes in through air intake and non-return valve arrangement and displaced by the vacuum pump element. After passing the element, the air enters the discharge silencer before exiting to the atmosphere.

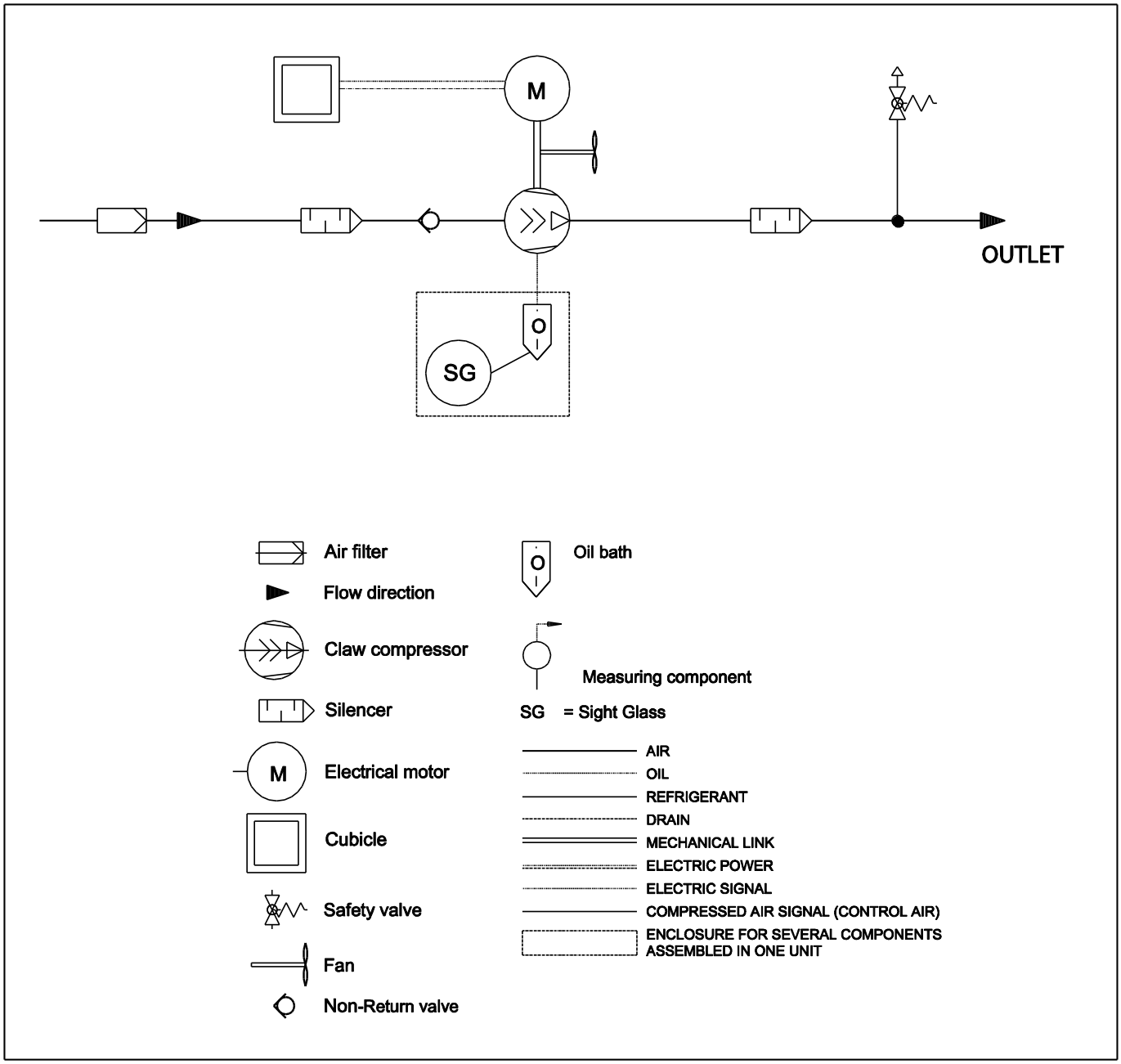

Flow diagram - DZS 150P, DZS 300P Dry claw overpressure pumps

Over pressure Pump

Air comes in through air inlet filter and silencer. The air flows through the non-return valve which prevents reverse flow of air to the inlet. The air is compressed in the element and exhausted at pressure through the pressure port. Ensure that the safety valve at the outlet is correctly installed and adjusted.

Cooling

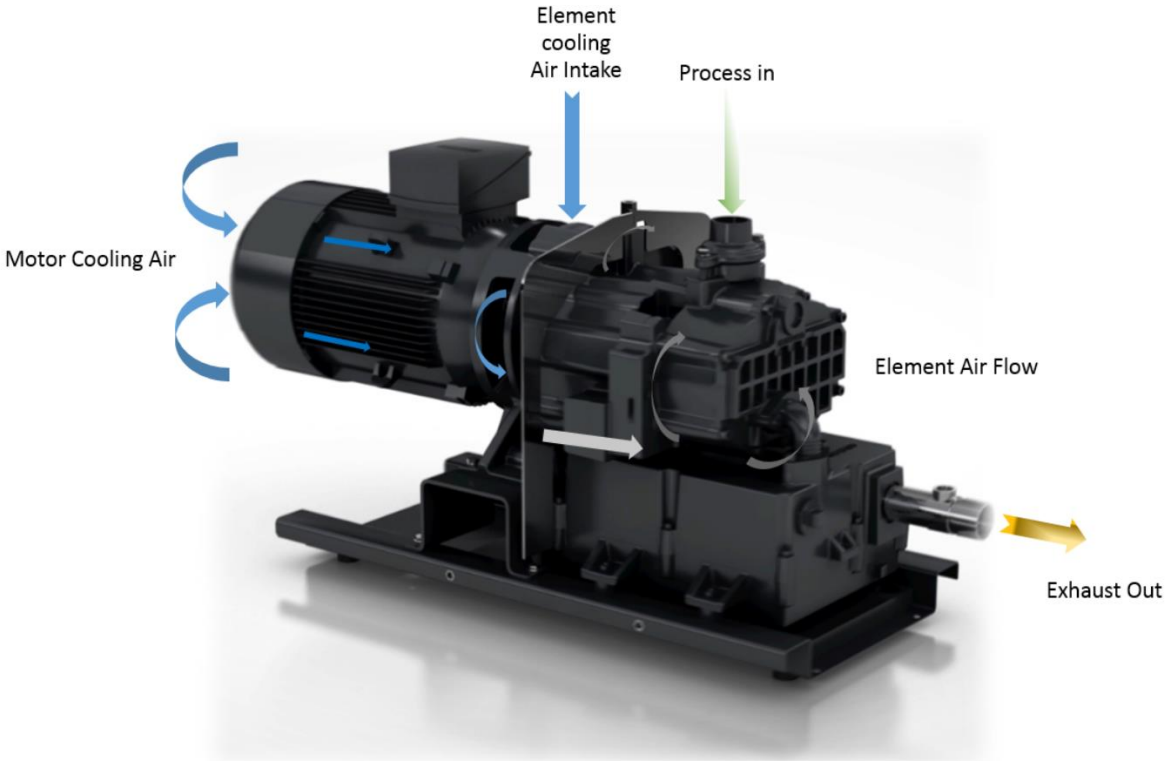

Pump cooling

The pump is cooled by forward curved fan located within the coupling housing. This provides air flow around the pump to aid cooling. The cooling fins also radiate the heat away and the motor fan cools the drive motor.
The gearbox oil is cooled down by recirculation and convection from the fan.
In many cases the process gas can also cool the element.

2.4 Condensate system

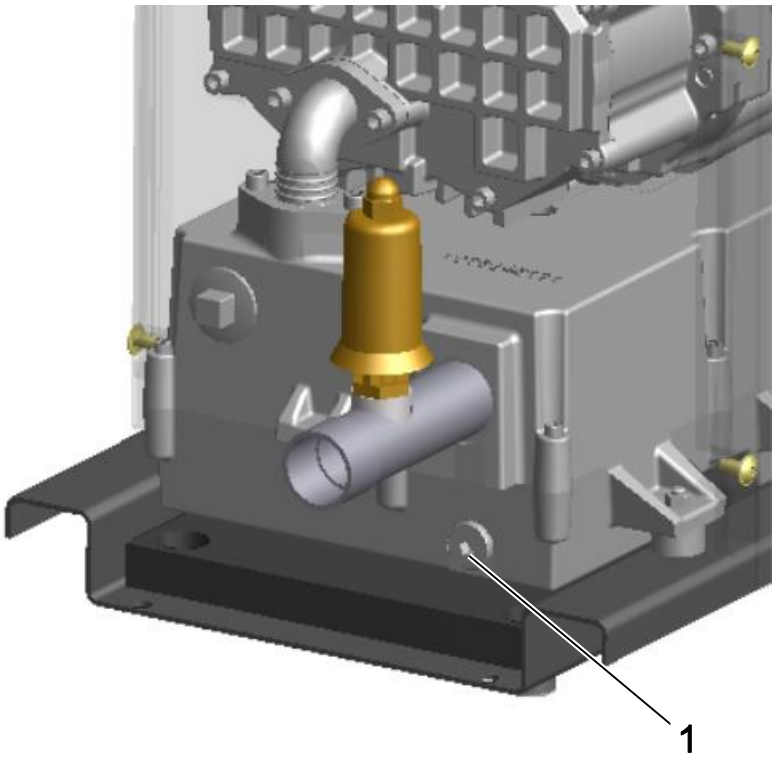

Reference	Name
1	Drain port

A port (1) at the base of the exhaust silencing chamber allows draining of the condensate.
Humid versions of this vacuum pump may have a manual drain valve / tap installed to facilitate easy draining.
From factory this drain point is sealed with a threaded plug, but can be exchanged by a connector with tube to drain the condensate.
Consult local regulations which are applicable for water drainage.

3 Installation

3.1 Dimension drawings

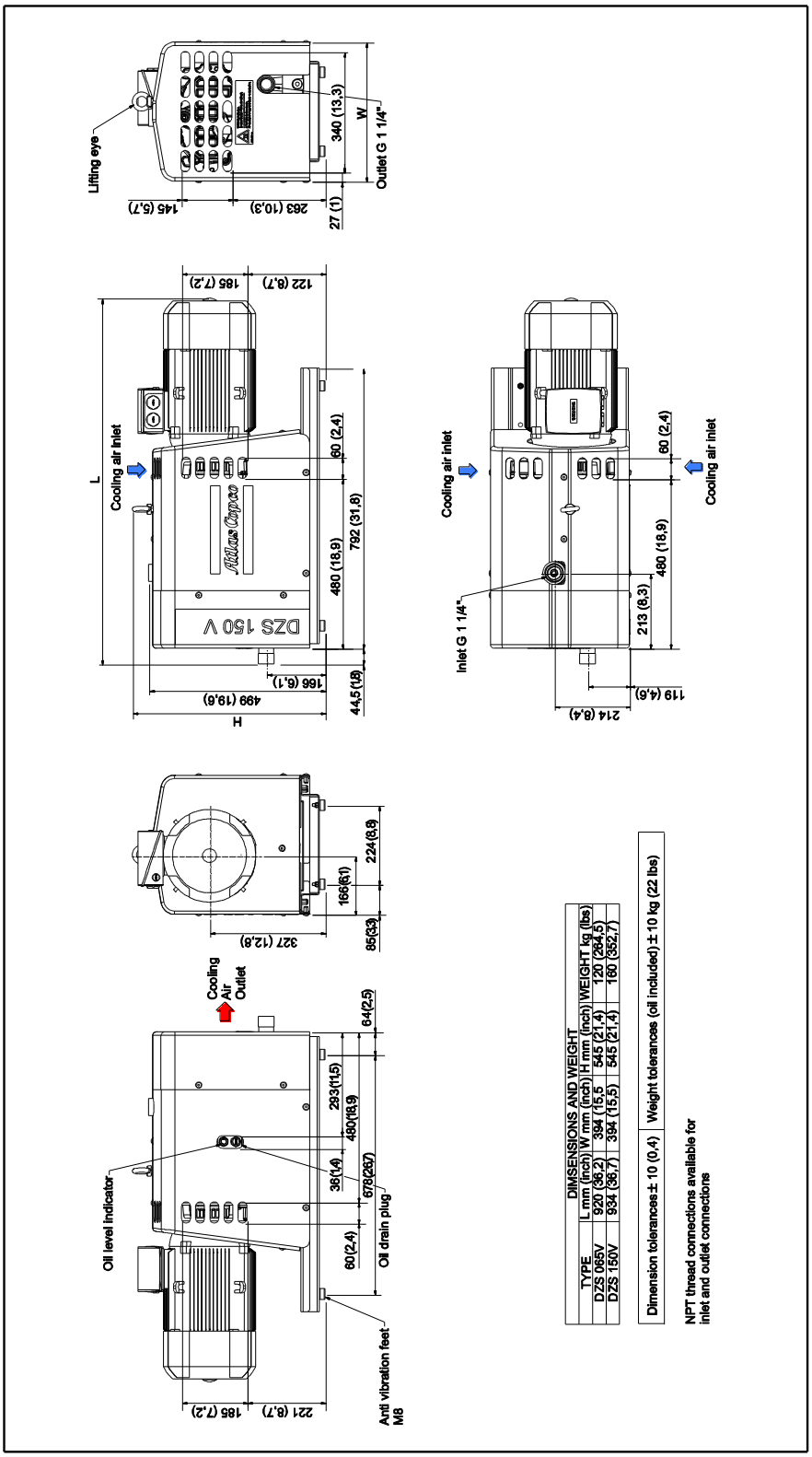

Dimension drawing, DZS 65V, DZS 150V

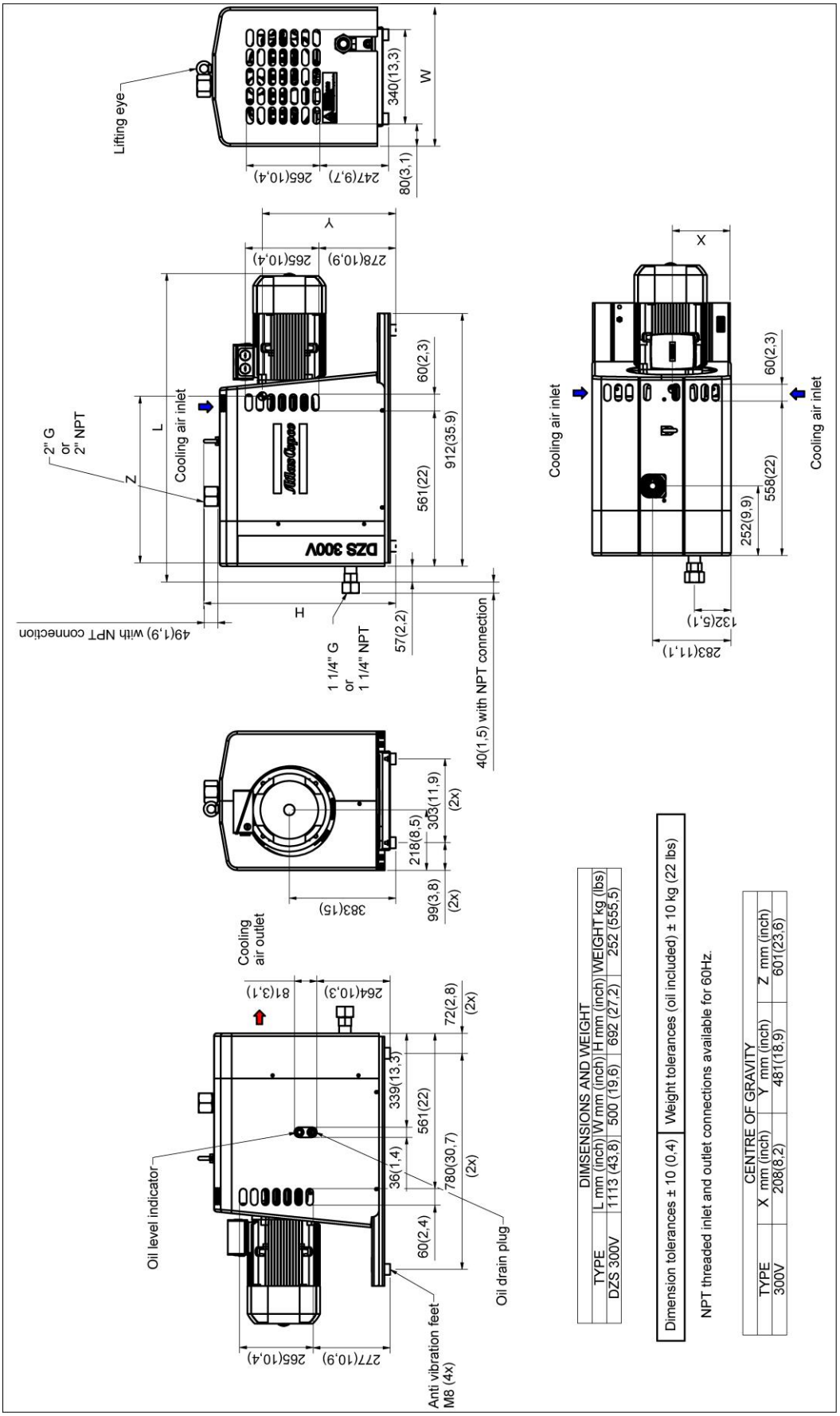

Dimension drawing, DZS 300V

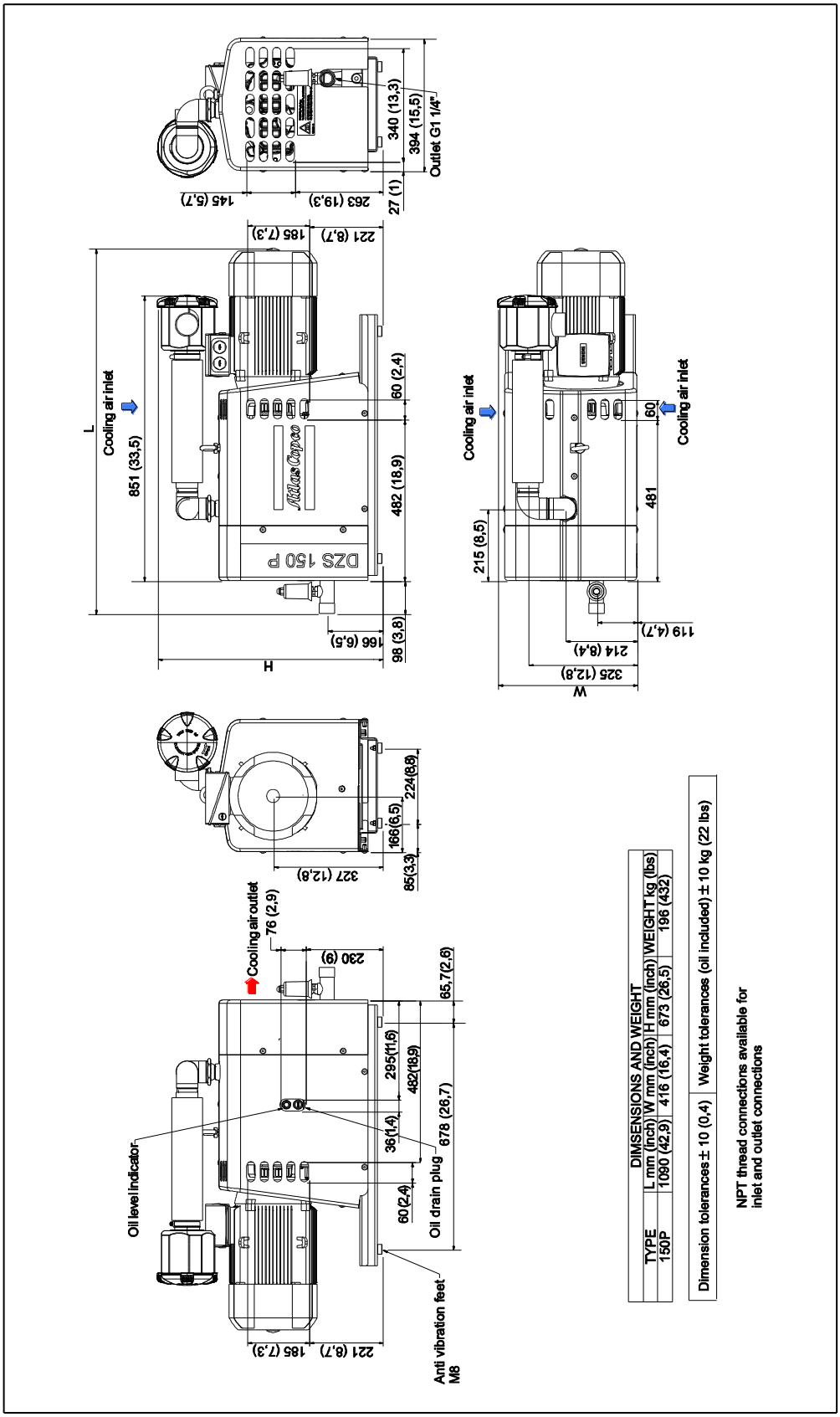

Dimension drawing, DZS 150P

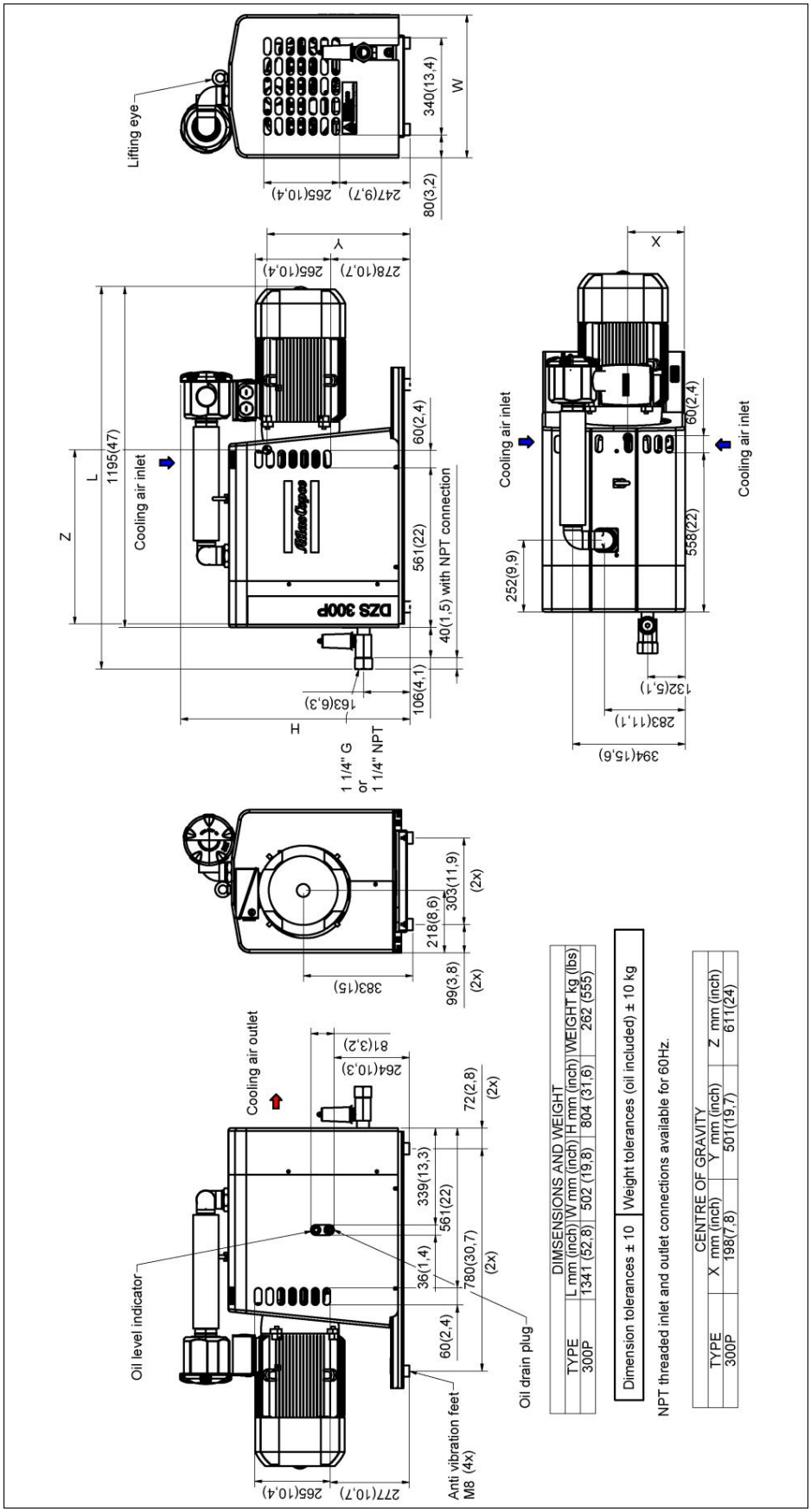

DIMSENSIONS AND WEIGHT				
TYPE	L mm (inch)	W mm (inch)	H mm (inch)	WEIGHT kg (lbs)
300P	1341 (52,8)	502 (19,8)	804 (31,6)	262 (555)

Dimension tolerances ± 10	Weight tolerances (oil included) ± 10 kg

NPT threaded inlet and outlet connections available for 60Hz.

CENTRE OF GRAVITY			
TYPE	X mm (inch)	Y mm (inch)	Z mm (inch)
300P	198(7,8)	501(19,7)	611(24)

Dimension drawing, DZS 300P

	In above dimension drawings, imperial dimensions are shown in brackets.

Dimensions and weight

Type	L		W		H		Motor weight		Unit Weight	
	(mm)	(inch)	(mm)	(inch)	(mm)	(inch)	(kg)	(lbs)	(kg)	(lbs)
DZS 065V	920	36,2	394	15,5	545	21,5	21	46,3	120	264,6
DZS 150V	934	36,8	394	15,5	545	21,5	34	75	160	352,7
DZS 300V	1100	43,3	500	19,7	688	27,1	57	125,7	300	661,4
DZS 150P	1090	42,9	416	16,4	673	26,6	70	154,3	196	432,1
DZS 300P	1360	53,5	502	19,8	802	31,6	105	231,5	252	555,6

	Dimension tolerances = +/- 10 mm (0,4 inch). Weight tolerances (oil included) = +/- 10 kg (22 lbs).

3.2 Installation proposal

Installation proposal Drawings

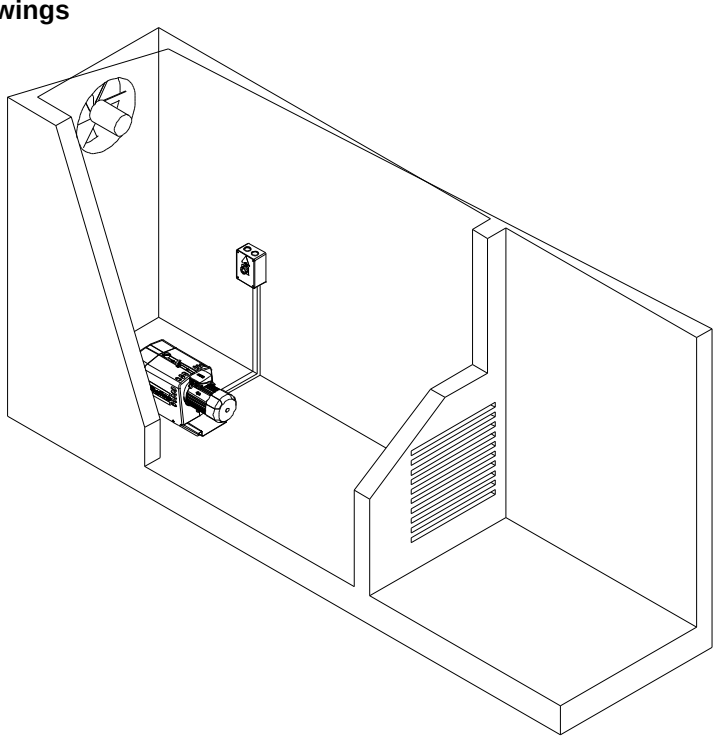

Allow sufficient space 400 mm (15.75 in) of clearance on all sides of the pump for safe and proper installation, daily inspection and maintenance. Top side should remain free for easy servicing the unit.

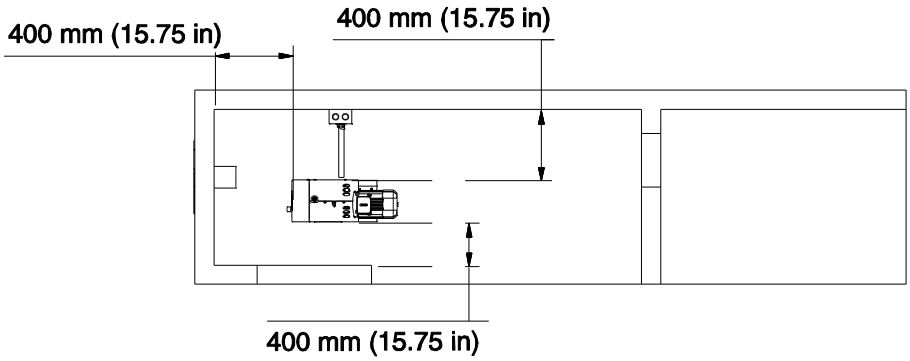

VENTILATION PROPOSALS

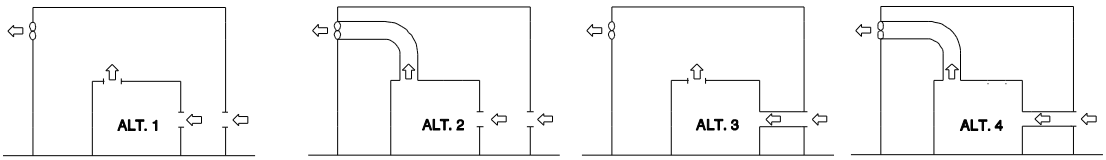

Installation proposal, DZS 065V, DZS 150V, DZS 300V Dry claw vacuum pumps

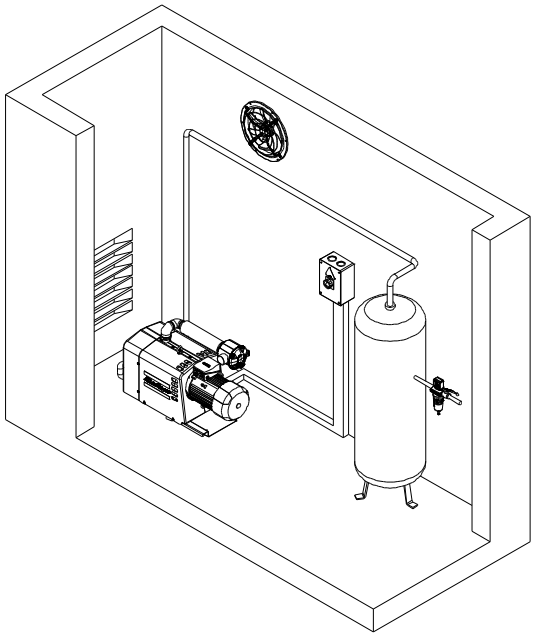

Allow sufficient space 400 mm (15.75 in) of clearance on all sides of the pump for safe and proper installation, daily inspection and maintenance. Top side should remain free for easy servicing the unit.

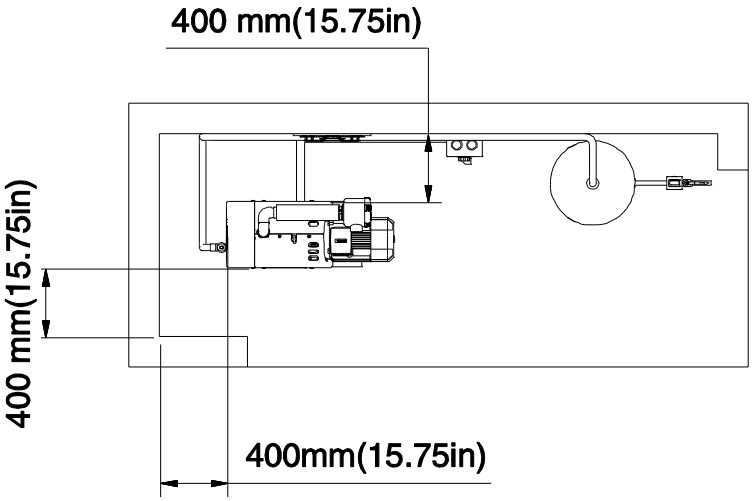

VENTILATION PROPOSALS

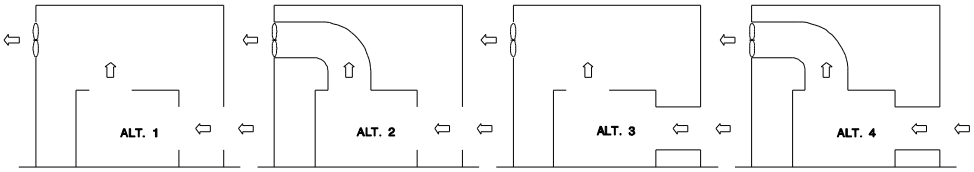

Installation proposal, DZS 150P, DZS 300P Dry claw overpressure pumps

	All pipes should be installed STRESS FREE to the pump unit.

Location:

Locate the pump horizontally on a level surface. Ensure surface must be clean, well lit, well ventilated and capable of taking the weight of the pump. The entire length of the frame base must be supported. Insert shim, where necessary (Do not use wood).
Anchoring to the ground is not necessary but essential if mounted on a frame or a structure that may result in the pump moving. Always consider using anti-vibration mounts.
Ambient temperature should not exceed temperatures listed in chapter “Technical data”. All models are intended for indoor installation. Outdoor installations will require additional weather protection. Do not locate the unit where the hot air from other pumps or heat generating equipment may be drawn in to the unit. Never restrict the flow of exhaust air from the pump. The hot exhaust air must be exhausted to the outside to prevent high ambient conditions in the room. The limiting ambient conditions are 0°C to 40°C (32°F to 104°F) and atmospheric pressure. Please consult the manufacturer, if operating outside of the criteria.
The pump is designed to be located and operated in safe environment areas where there this is no risk of explosion. Environmental conditions must comply with the protection class of the motor as depicted on its name plate. Consideration must be given to the safety and welfare of personnel. Thermal insulation should be provided to offer protection against the intense heat which can be generated around the exhaust of the pump.

Piping connections:

Process connection, exhaust pipework and associated component must be installed in line with general engineering practices and abide by local by-laws and regulations. Good installation practice include the correct sizing of the process pipework to reduce a loss of performance and to prevent damage to the pump. Ideally all pipework, filters and accessories should be fully supported to reduce physical stress on the pump.
Vibration transmittal through the pipework must be minimized. Pipework should slope away from the pump to reduce the risk of condensate liquid running back in the pump. The filtration equipment should be fitted if there is a chance of particulate carry-over. 5 micron or less is ideal.
Pipework should be straight as possible with no tight bends and convoluted runs. It should be sized correctly to reduce losses. Use the same diameter of pipe for pump process connection. Pipe runs that are convoluted or lengthy (beyond 10 meters) need careful consideration and proper sizing.
Make sure all piping connections from the pump to the point of use are leak tight and secure. Use easy to release and flexible connection at the point of final connection to the pump.
Process isolation valves are also essential but in the case of vacuum pump, never isolate the exhaust that may lead to high back-pressure. Drip-leg drains or low position drain point is also good installation practice. The exhaust silencer is fitted with a drain plug or drain tab and consideration should be given to adequately dealing with condensate drain off.
A variety of pipe material are available for installation but they must be compatible with the process medium. The discharge air can run up to 250 °C (482 °F), so piping should be suitable to handle this temperature.

	At 2.5 bar (g) pressure, over-pressure pump can generate hot air up to 250°C, the pipe must be rated accordingly.

Leakage in the pipework and accessories is a major factor that affect the performance and efficiency of the pump.
Regular inspection and leak testing is recommended. It is essential that the internals of the pipe is cleared of foreign objects before starting the pump. Installation of an inlet protection gauge is good practice to safeguard the pump.

Ventilation:

Avoid recirculating the hot air from the pump ventilation ports back it to the pumps cooling system and relief valve. This will cause inadequate cooling and unnecessary overheating.
The air velocity to the ventilation ducts to be limited to 5 m/s
The maximum air temperature at intake opening is 40°C (104°F), (minimum 0°C / 32°F)
Ventilation alternative 1 and 3 (refer the Installation proposal Drawings):
The required ventilation to limit pump room temperature can be calculated from:

$Qv = 1.06\ N / T$

Where, Qv = required cooling air flow (m^3/s)
N = Nominal motor power of pump (kW)
T = Temperature increase in pump room. (°C)

Ventilation alternative 2 and 4 (refer Installation proposal Drawings):

The fan capacity should match the pump fan capacity at a pressure head equal to the pressure drop caused by cooling air ducts.
Maximum allowable pressure drop in ducting before or after the vacuum pump = 10 Pa.

Air intake filter (In case of over-pressure pump)

If the air intake filter (1) is delivered loose, mount it in a leak-tight manner according to the following instructions:

Reference	Name
1	Air filter

When replacing the air intake filter element, the dust may fall into the pump inlet and resulting damage to the pump.
The air intake filter (1) should be installed in a horizontal position to prevent filtered dust falling into the pump inlet

Safety

⚠	The operator must apply all relevant Safety precautions.

Outdoor/altitude operation

The pumps are not designed for outdoor use.
The pumps can only be used in temperatures above 0° C (+32° F). If frost might occur, the appropriate measures should be taken to avoid damage to the machine and its ancillary equipment. In this case, consult Atlas Copco.
Also if operating above 1000 m (3300 ft.), consult Atlas Copco.

Moving/lifting

The pump is delivered on a wooden pallet. During transport, the pump is secured to the pallet using bolts.
Remove the transport fixation bolt before lifting. Lift the pump carefully with a hoist of appropriate lifting capacity.

The lifting eye (1) provided at the top of the pump for lifting. See figure below.

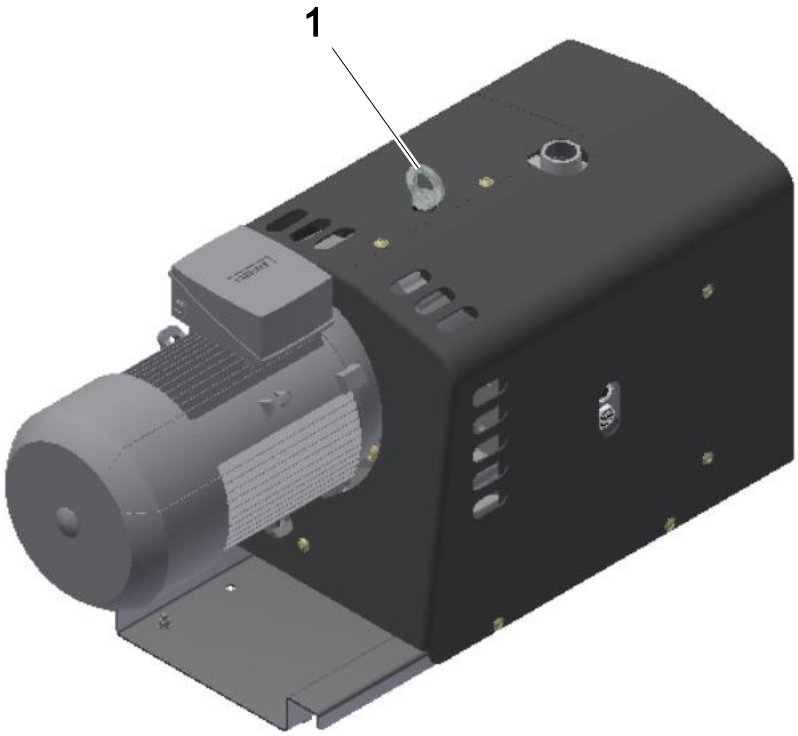

Reference	Name
1	Lifting eye

The pump can be moved by a hoist using the lifting eye. Take care not to damage the bodywork during lifting or transport.

Ensure that the eyebolt is fully wound in to the lifting boss. Ensure eye bolt is in serviceable condition and rated according to the load.
The motor is also equipped with an eyebolt but is only designed for the motor itself.

	Use an eye bolt provided at the pump for lifting the pump assembly. Do not use an eyebolt at the motor.

Always check the center of gravity while lifting the pump. Note that on some pressure pumps, the weight of the motor is significant and may cause the pump to lift at an angle.

	It is not allowed to lift the pump if the canopy parts or lifting supports are not completely installed. When the pump is being lifted, it is also forbidden to come under the load or to perform maintenance activities to it.

Acclimatization

	When moving the pump into an installation room, forming of condense can occur on some components. To avoid dew harming of electrical components, ensure at least 2 hours of acclimatization before switch on the pump.

3.3 Electrical connections

Always use a protection system, including an overcurrent protection and an electrical disconnecting device between the pump and the electrical power supply. Refer the chapter “Motor data” in this book and motor data plate for motor current details. The pump is delivered without electrical cable and switch. For the electrical connection, check the diagram inside the terminal box or on the motor data plate.

	Before starting up the machine, check the rotation direction of the motor to prevent pump failure. Motor rotation direction must be counter clockwise (when viewed from Non-drive side to drive side) for all motor. If this is incorrect, switch off the voltage and reverse two incoming electric lines.

	For the selection of the correct cables and fuses, refer to section “Electric cable size and fuses” in this manual.

3.4 Pictographs

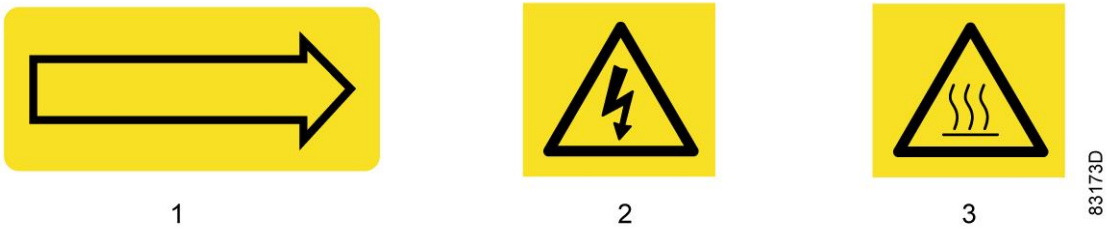

Reference	Name
1	Rotation direction of fan
2	Warning: voltage
3	Hot surface warning

4 Operating instructions

	The operator must apply all relevant safety precautions. See section Safety precautions during operation.

4.1 Initial start-up

	The pump is supplied with oil in the gearbox.

Initial start-up instructions:

- Remove the canopy panel(s) in order to get access to the internal components.
- Check the process lines for the correct size to prevent high pressure drop and for cleanliness to protect the pump.
- Make sure the pump outlet is not obstructed.
- Check that the electrical connections correspond to the applicable codes and that all wires are clamped tight to their terminals. The installation must be earthed and protected against short circuits by fuses of the inert type in all phases.
- An isolating switch must be installed near the pump.
- Check the oil level. The minimum level should reach the oil sight glass when the pump is stopped. If needed, top up the oil.
- Take care that no dirt drops into the oil system. Refit and tighten the filler plug.
- Provide labels, warning the operator that:
  - The pump may automatically restart after voltage failure (if activated, consult Atlas Copco).
  - The pump is automatically controlled and may be restarted automatically.
  - The pump may be remotely controlled.

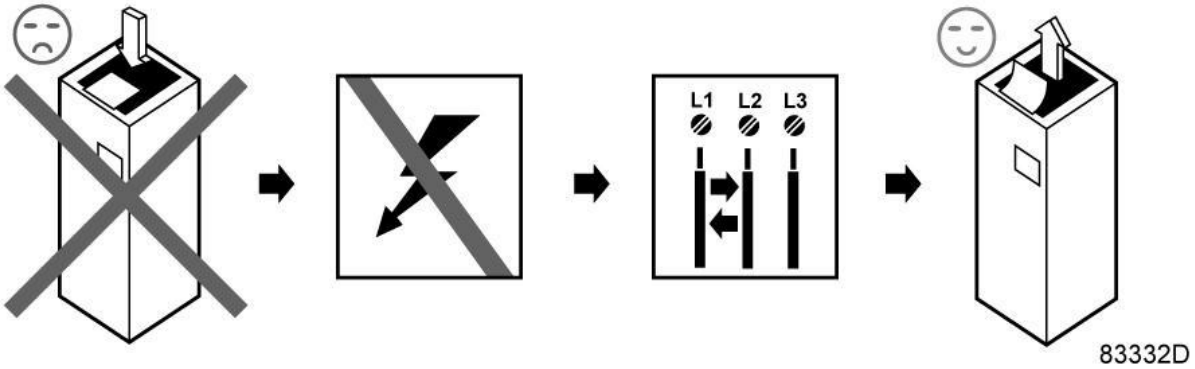

- Switch on the voltage and switch it off immediately. Check the rotation direction of drive motor while the motor is coasting to a stop. The correct rotation direction of the drive motor is indicated by an arrow shown on the motor fan cowl. If the rotation direction of the drive motor is incorrect, open the isolating switch and reverse two incoming electric lines. Incorrect rotation direction of the drive motor may cause damage to the pump.
- Start and run the pump for a few minutes. Check that the pump operates normally.
- Open the inlet isolation valve.
- Reinstall the canopy panel(s).

	If you intend to apply the pump on humid applications, it is recommended that the unit is allowed to achieve optimal running temperature before it effectively put in operation. This can be done by running the unit against a closed suction line for 30 minutes.

4.2 Starting

Procedure

- Check oil level and oil condition.
- Switch on the voltage.

	To avoid excessive energy consumption and damage to the pump, the maximum allowed starting frequency is 30 starts per hour.

4.3 During operation

Regularly check the oil level and the oil condition. The oil level should be in the middle of the oil sight glass. Top up, if necessary, with correct type of oil.
It is recommended to use genuine Atlas Copco Lubricants.

Filling the oil in gearbox

Follow below steps to fill the oil in gearbox:

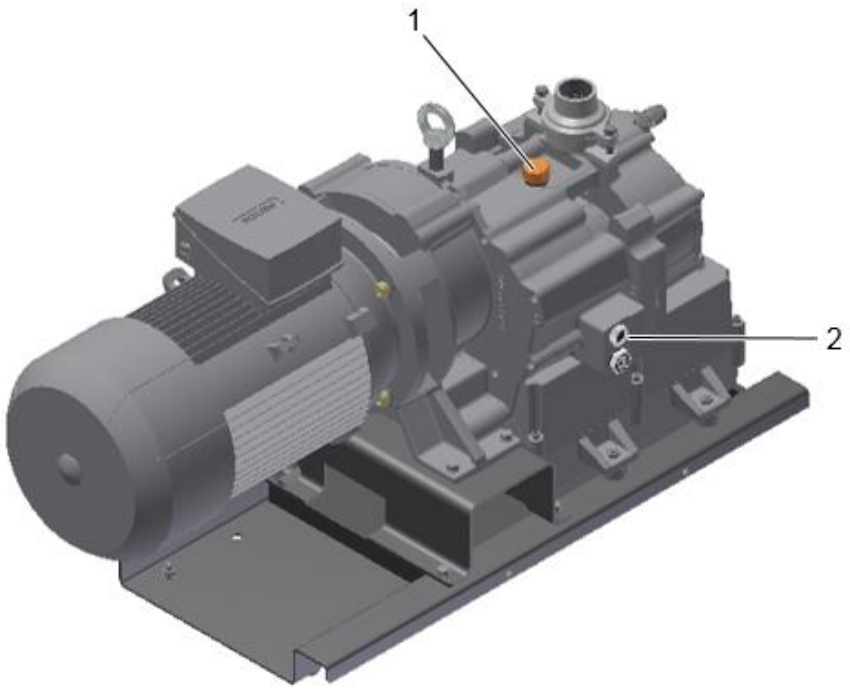

Reference	Name
1	Oil filler plug
2	Oil sight glass

1 Remove the canopy panel(s) in order to get access to the internal components.
2 Remove the oil filler plug (1).
3 Pour oil in the gearbox up to the middle of the sight glass (2).
4 Close the filler plug. Remove all oil spills on the pump and/or floor.
5 Reinstall the canopy panel(s).

4.4 Stopping

It is recommended to run the unit isolated for typically 15 minutes pumping clean dry air at around 50-100 mbar(a) prior to switching off. If the air stream was heavily contaminated with water vapour, a longer period of running the unit off-line can only extend lifetime.

4.5 Taking out of operation

⚠	The operator must apply all relevant safety precautions. See section Safety precautions during operation. Also consult section Problem solving.

Procedure:

- Switch off the voltage and disconnect the pump from the mains.

5 Maintenance

5.1 Preventive maintenance schedule

⚠	Before carrying out any maintenance, repair work or adjustment, • Stop the pump, close the isolation valve and wait for 3 minutes. • Press the emergency stop button and switch off the voltage. • Depressurize the pump by venting the process side of the pump, if it is safe to do so. • Open and lock the isolating switch. • Lock the air inlet valve during maintenance or repair. The operator must apply all relevant safety precautions.

Warranty - Product Liability

Use only authorized parts. Any damage or malfunction caused by the use of unauthorized parts is not covered by Warranty or Product Liability.

Service kits

For overhauling and for preventive maintenance, service kits are available. Service kits comprise all parts required for servicing the component and offer the benefits of genuine Atlas Copco parts while keeping the maintenance budget low.
Consult the Spare Parts List for part numbers.

Service contracts

Atlas Copco offers several types of service contracts, relieving you of all preventive maintenance work. Consult your Atlas Copco Customer Centre.

General

When servicing, replace all removed O-rings and washers.

Intervals

The local Atlas Copco Customer Centre may overrule the maintenance schedule, especially the service intervals, depending on the environmental and working conditions of the pump
The longer interval checks must also include the shorter interval checks.

Preventive maintenance schedule

The following checks should be carried out to ensure safe operation and long service life.
This is a guide only and may change due the harshness of the process.

Action	Normal	Medium	Harsh
Check the oil level and fill the gearbox with the oil, if necessary.	Daily	Daily	Daily
Remove the air filter elements and inspect. Replace damaged or heavily contaminated elements.	Monthly	Monthly	Weekly
Check for possible air and oil leakages			
Check coupling and fan			
Inspect the pipe lines and connections			
Replace the air filter elements	4000 hrs	2000 hrs	1000 hrs
Inspect and clean claws			
Replace O-rings			
Check pressure and temperature readings			
Check operation of cooling fans of converter and clean heatsink			
Check and clean cooling fan assembly			
Change oil * (1)	20000 hrs (2)	10000 hrs (2)	5000 hrs (2)
Replace lipseal assembly	20000 hrs	20000 hrs	20000 hrs
Element overhaul	48000 hrs	24000 hrs	12000 hrs
Clean damper			
Change spring inlet valve			
Change coupling			
Consult Atlas Copco for the internal cleaning guidelines.	When necessary.		

(1) Or after 4 years whichever comes first.
(2) Only use synthetic oil.
* In medium and harsh applications, an optional 500 hrs oil sample is recommended.
* For overpressure pump, oil change intervals are different.

⚠	Any leakage should be attended immediately. Damaged hoses or flexible joints must be replaced.

⚠	We recommend to monitor the oil condition through the sight glass and to change the oil when it becomes discolored. Not changing oil in time may result in failure of the pump.

👁	The bearings of the motor are greased for life.

5.2 Oil specifications

It is strongly recommended to use genuine Atlas Copco Lubricants. They are the result of years of field experience and research. See section Preventive maintenance schedule for the advised replacement intervals and consult your Spare Parts list for part number information.

⚠	Avoid mixing lubricants of different brands or types as they may not be compatible and the oil mix may have inferior properties.

Atlas Copco vacuum vanes fluid plus 100

Atlas Copco's vacuum vanes fluid plus 100 is a specially developed lubricant that can be used in the gearbox of the claw pump. It's specific composition keeps the vacuum pump in excellent condition.

5.3 Storage

If the pump is to be stored for a short time then it is advisable to take some precautions. Always isolate the pump from the suction inlet and exhaust outlet. Make sure it is clean and dry from process or condensation within the element. In order to keep rubber parts and lip seals efficient and properly working, we recommend to operate the pump for at least 30 minutes every 6 months with the intake closed.
Ideally the pump should be covered to protect from mechanical damage and kept clean, dry and isolated.

Long-term storage needs a little more consideration. It is best to ask for further advice from Atlas Copco especially when a restart / decommissioning is required.

If the pump is going to be stored without running from time to time, protective measures must be taken.
Consult Atlas Copco.

5.4 Disposal of used material

Used lubricants or any other used material (for example, cleaning rags, machine parts, and so on) must be disposed of in an environmentally friendly and safe manner, and in line with the local recommendations and environmental legislation.

6 Adjustments and servicing procedures

⚠	Before carrying out any maintenance, repair work or adjustment, • Stop the pump, close the isolation valve and wait for 3 minutes. • Press the emergency stop button and switch off the voltage. • Depressurize the pump by venting the process side of the pump, if it is safe to do so. • Open and lock the isolating switch. • Lock the air inlet valve during maintenance or repair. The operator must apply all relevant safety precautions.

⚠	Before carrying out any adjustments on the pump, the first action that must be taken is isolating the pump from the customer's network.

6.1 Air filter

Air filter provided with over pressure pump only.

Reference	Description
1	Air filter

Follow below procedure to replace the filter element:
1 Stop the pump. Switch off the voltage.
2 Remove the cover of the air filter. Remove the filter element.
3 Install the new filter element and fit the cover. Never install damaged filter element.

⚠	When placing the air filter element, verify that the seal is present and in good condition.

Cleaning the intake air filter element

1 Remove the intake filter element from the housing.
2 Clean the intake filter element in one of the following ways:
   Hand washing:
   Soak and agitate element in a warm water and mild detergent solution. Allow adequate time for the element to air dry (24 hours minimum). Do not install a damp element. This will cause higher initial pressure loss and rapid dirt loading.
   Compressed air cleaning:
   Using approximately 7 bar(e) (100 psi(g)), direct air flow at inside of element towards pleats. Blow off the outside of the element directing the air flow down to avoid embedding dirt in the media. Blow off the inside again to remove any dirt that might be on the clean side of the element.
   Vacuum cleaning:
   Point the vacuum cleaner to the dirty side (outside of element) only, using a vacuum of approximately 100 mbar(a) (75 torr). A crevice tool is recommended.
   Hand cleaning:
   Hold element down with one hand and move other hand across the fins in a strumming motion. This action will dislodge most of the dirt.
3 The element is ready to be reused.

6.2 Oil top-up

1 Remove the filler plug. Fill the gearbox with oil until the level reaches the top of the oil sight glass.
   Take care that no dirt drops into the system. Refit and tighten the filler plug.
2 Run the pump loaded for a few minutes. Stop the pump.
3 Close the isolation valve and switch off the voltage.
   - Wait 3 minutes for the pump to depressurize.
   - Unscrew the oil filler plug just one turn to permit any remaining pressure in the system to escape.
4 Fill the gearbox with oil until the level reaches middle of the oil sight glass. (See section “During operation”).
5 Refit and tighten filler plug.
6 When the oil level is too low, repeat the steps 1 to 5.

6.3 Cleaning motor fan and vent holes

Motor fan, main cooling fan and vent holes should be kept clean. This can be done using compressed air and a dry cloth. Do not use fluids or substances other than those indicated.

7 Problem solving

⚠	Before carrying out any maintenance, repair work or adjustment, • Stop the pump, close the isolation valve and wait for 3 minutes. • Press the emergency stop button and switch off the voltage. • Depressurize the pump by venting the process side of the pump, if it is safe to do so. • Open and lock the isolating switch. • Lock the air inlet valve during maintenance or repair. The operator must apply all relevant safety precautions.

Before electrical maintenance

⚠	Wait for at least 10 minutes before starting any electrical repairs as dangerous high voltage remains on the capacitors of the start and speed regulation unit during some minutes after switching off the voltage

Faults and remedies:

Cause	Remedy
No voltage or wrong voltage	Check power supply
Overload protection has tripped	Compare electrical data mentioned on data plate/instruction book with setting of overload protection. Adjust setting of overload when setpoint is not correct
Pump is blocked	Check if foreign material has entered the pump. If necessary install an inlet filter to prevent foreign material entering the pump
Motor damaged	Consult Atlas Copco
Air consumption exceeds air delivery of pump	Check equipment connected
Clogged air inlet filter	Replace filter
Too high pressure drop between process and pump inlet (Vacuum pump) or pump outlet (Over-pressure pump)	Check the process lines for correct size and for leakage. Correct if necessary
Pump element out of order	Consult Atlas Copco
Inlet filter blocked	Change inlet filter
Check vacuum relief valve (Vacuum pump) or safety valve (Over-pressure pump)	Consult Atlas Copco
Check rotation direction of the motor	Change rotation direction of the motor
Inlet non-return valve is blocked	Consult Atlas Copco
Internal parts are worn or damaged	Consult Atlas Copco
Insufficient cooling air or cooling air temperature or relative humidity to high	Check for cooling air restriction or improve ventilation of the pump room. Avoid recirculating of cooling air. If installed, check capacity of pump room fan.
Pump element out of order	Consult Atlas Copco
Ambient temperature too high	Check limitations
Inlet temperature too high	Check limitations

Cause	Remedy
Internal cooling of the element too low	Check for clogging in suction, discharge or pressure line. Check size and length of the installed suction, discharge or pressure line to lower pressure drops
Inlet non-return valve is blocked	Consult Atlas Copco
Bearings damaged	Consult Atlas Copco
Motor coupling damaged	Consult Atlas Copco
Low oil level in gearbox	Re-fill gearbox if necessary. Check for possible leakages.
Fan damaged	Consult Atlas Copco
Gears damaged	Consult Atlas Copco

8 Technical data

8.1 Reference conditions and limitations

Reference conditions

	Unit	
Relative humidity	%	0
Air inlet temperature	°C	20
	°F	68
Exhaust back pressure	mbar(g)	0
	psi	0
Ambient barometric pressure	mbar(a)	1013
	psi	14.7

Limitations

	Unit	
Minimum ambient temperature	°C	0
	°F	32
Maximum ambient temperature	°C	40
	°F	104
Minimum allowable inlet temperature	°C	0
	°F	32
Maximum allowable inlet temperature	°C	40
	°F	104
Maximum (absolute) inlet pressure	mbar(a)	1050
	psi	15.22
Maximum outlet pressure mbar(a) (vacuum pump)	mbar(a)	1013
	psi	14.7
Maximum outlet pressure mbar(g) (over-pressure pump)	bar(g)	2.5
	psi	36.3

8.2 Pump data

	The readings below are valid when operating at reference conditions. See section Reference conditions.

Common pump data

	Unit	
Number of compressions:		1
Maximum exhaust back pressure:	mbar(a)	1013
	Torr	759.81
Temperature of the air leaving the discharge (Approx.)	°C	250
	°F	482

	Unit	DZS 065V	DZS 150V	DZS 300V
Ultimate pressure	mbar(a)	50	50	140
	Torr	37.5	37.5	105
Nominal motor power 50 Hz	kW	1.8	3.7	6.2
	Hp	2.412	4.958	8.3
Nominal motor power 60 Hz	kW	2.2	4.4	7.4
	Hp	2.948	5.9	10.05
Nominal shaft speed 50 Hz	RPM	3000	3000	3000
Nominal shaft speed 60 Hz	RPM	3600	3600	3600
Oil capacity	L	0.8	0.8	1.6
	US GAL	0.211336	0.211336	0.422672
	Imp. GAL	0.1752	0.1752	0.3504
	cu.ft.	0.02824	0.02824	0.05648

	Unit	DZS 150P	DZS 300P
Maximum outlet pressure	bar(g)	2.5	2.5
	Torr	1875	1875
Nominal motor power 50 Hz	kW	11	19
	Hp	14.74	25.5
Nominal motor power 60 Hz	kW	13.2	22.8
	Hp	17.7	30.6
Nominal shaft speed 50 Hz	RPM	3000	3000
Nominal shaft speed 60 Hz	RPM	3600	3600
Oil capacity	L	0.8	1.6
	US GAL	0.211336	0.422672
	Imp. GAL	0.1752	0.3504
	cu.ft.	0.02824	0.05648

8.3 Motor data

Model	Motor voltage supply range (V)		Nominal current (A)		Nominal speed (RPM)		Nominal power (kW)		Service factor	
	50 Hz	60 Hz	50 Hz	60 Hz	50 Hz	60 Hz	50 Hz	60 Hz	50 Hz	60 Hz
DZS 065V	200 (Δ)	200 (Δ)	6.9	8.4	2886	3485	1.8	2.2	1.1	1.05
	230 (Δ)	230 (Δ)	6.2	7.6	2921	3519	1.8	2.2	1.1	1.05
		380 (Δ)		4.5		3501		2.2		1.05
	400 (Y)		3.2		2886		1.8		1.1	
		460 (Δ)		3.7		3501		2.2		1.05
	500 (Δ)	575 (Δ)	2.8	3	2918	3501	1.8	2.2	1.1	1.05
DZS 150V	200 (Δ)	200 (Δ)	13.2	13.2	2940	3541	3.7	4.4	1.1	1.1
	230 (Δ)	230 (Δ)	11.6	11.6	2958	3557	3.7	4.4	1.1	1.1
		380 (Δ)		7		3551		4.4		1.1
	400 (Y)		6.6		2940		3.7		1.1	
		460 (Δ)		5.8		3551		4.4		1.1
	500 (Δ)	575 (Δ)	5.3	4.6	2945	3551	3.7	4.4	1.1	1.1
DZS 300V	200 (Δ)	200 (Δ)	21.5	25.4	2950	3548	6.2	7.5	1.1	1.09
	230 (Δ)	230 (Δ)	18.6	22.4	2966	3564	6.2	7.5	1.1	1.09
		380 (Δ)		13.6		3553		7.5		1.09
	400 (Δ)		10.8		2950		6.2		1.1	
		460 (Δ)		11.2		3553		7.5		1.09
	500 (Δ)	575 (Δ)	8.6	9	2958	3553	6.2	7.5	1.1	1.09
DZS 150P	200 (Δ)	200 (Δ)	39.1	37.9	2956	3542	11	13.2	1.1	1.1
	230 (Δ)	230 (Δ)	40.2	34.3	2966	3561	11	13.2	1.1	1.1
		380 (Δ)		19.8		3555		13.2		1.1
	400 (Δ)		19.5		2956		11		1.1	
		460 (Δ)		16.3		3555		13.2		1.1
	500 (Δ)	575 (Δ)	15.2	13.1	2946	3555	11	13.2	1.1	1.1
DZS 300P	200 (Δ)	200 (Δ)	64.5	75	2949	3532	19	22	1.1	1.14
	230 (Δ)	230 (Δ)	56.3	65	2966	3555	19	22	1.1	1.14
		380 (Δ)		32		3546		22		1.14
	400 (Δ)		32.5		2953		19		1.1	
		460 (Δ)		32		3546		22		1.14
	500 (Δ)	575 (Δ)	25.4	25.6	2953	3546	19	22	1.1	1.14

8.4 Electric cable size and fuses

Important

	The voltage on the pump terminals must not deviate more than 10% of the nominal voltage. It is however highly recommended to keep the voltage drop over the supply cables at nominal current below 5% of the nominal voltage (IEC 60204-1). • If cables are grouped together with other power cables, it may be necessary to use cables of a larger size than those calculated for the standard operating conditions. • Use the original cable entry. See section Dimension drawings. • To preserve the IP protection degree of the electric cubicle and to protect its components from dust from the environment, it is mandatory to use a proper cable gland when connecting the supply cable to the pump. • Local regulations remain applicable if they are stricter than the values proposed below. **Caution:** • Always double-check the fuse size versus the calculated cable size. If required, reduce fuse size or enlarge cable size. • Cable length should not exceed the maximum length according to IEC60204 Table 10

	Keep in mind that the starting currents can be 1000% higher than the nominal currents of the motor.

Leakage breaker (optional)

If the installation requires a leakage breaker, always use an all current sensitive leakage breaker, RCM or RCD Type B (according to IEC/EN 60755) with a sufficient trip level.

Currents and fuses

IEC and UL/cUL approval

Model	Motor voltage supply range (V)		I_{max} under voltage		Max. fuse pack IEC class gL/gC	Max. fuse pack UL class K5 CSA HRC from ii	Recommended cable size mm² (P/FF)
	50 Hz	60 Hz	50 Hz	60 Hz			
DZS 065V	200 (Δ)	200 (Δ)	8.3	10.1	12	12	4
	230 (Δ)	230 (Δ)	7.4	9.1	10	10	4
		380 (Δ)	0.0	5.4	6	6	4
	400 (Y)		3.8	0.0	4	4	4
		460 (Δ)	0.0	4.4	6	6	4
	500 (Δ)	575 (Δ)	3.4	3.6	4	4	4
DZS 150V	200 (Δ)	200 (Δ)	15.8	15.8	16	16	4
	230 (Δ)	230 (Δ)	13.9	13.9	16	16	4
		380 (Δ)	0.0	8.4	10	10	4
	400 (Y)		7.9	0.0	8	8	4
		460 (Δ)	0.0	7.0	8	8	4
	500 (Δ)	575 (Δ)	6.4	5.5	8	8	4
DZS 300V	200 (Δ)	200 (Δ)	25.8	30.5	32	35	10
	230 (Δ)	230 (Δ)	22.3	26.9	32	35	10
		380 (Δ)	0.0	16.3	20	20	4
	400 (Δ)		13.0	0.0	16	16	4
		460 (Δ)	0.0	13.4	16	16	4
	500 (Δ)	575 (Δ)	10.3	10.8	12	12	4
DZS 150P	200 (Δ)	200 (Δ)	46.9	45.5	50	50	16
	230 (Δ)	230 (Δ)	48.2	41.2	50	50	16
		380 (Δ)	0.0	23.8	25	30	10
	400 (Δ)		23.4	0.0	25	25	6
		460 (Δ)	0.0	19.6	20	20	4
	500 (Δ)	575 (Δ)	18.2	15.7	20	20	4
DZS 300P	200 (Δ)	200 (Δ)	77.4	90.0	100	100	70
	230 (Δ)	230 (Δ)	67.6	78.0	80	80	50
		380 (Δ)	0.0	38.4	40	40	16
	400 (Δ)		39.0	0.0	40	40	16
		460 (Δ)	0.0	38.4	40	40	16
	500 (Δ)	575 (Δ)	30.5	30.7	40	40	16

Fuse calculations for IEC: are done according to 60364-4-43 electrical installations of buildings, part 4: protection for safety- section 43: protection against overcurrent. Fuse sizes are calculated in order to protect the cable against short circuit.

Fuse calculations for cUL and UL: The indicated fuse size is the maximum fuse size in order to protect the motor against short circuit. For cUL fuse HRC form II, for UL fuse class K5.

Earthing

The earthing cable connected to the pump (PE) should be minimum 10 mm² (according to EN 60204-1 section 828).

Cable sizing according IEC

The tables below indicate the current carrying capacities of cables for 3 commonly used installation methods, calculated according to standard 60364-5-52 - electrical installations of buildings part 5 - selection and erection equipment and section 52 - current carrying capacities in wiring systems.

The allowed currents are valid for PVC insulated cables with three loaded copper conductors (maximum conductor temperature 70 °C).

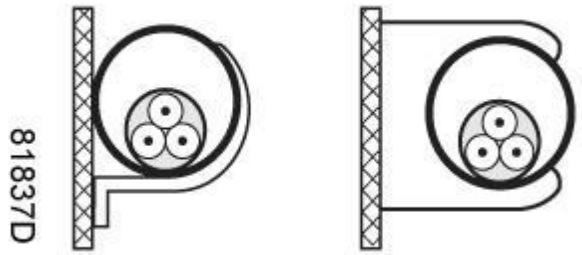	Installation method B2 according table B.52.1. Multi-core cable in conduit on a wooden wall.

Maximum allowed current in function of the ambient temperature for installation method B2

Cable section mm²	**Ambient temperature**				
	30°C	40°C	45°C	50°C	55°C
4	< 27 A	< 23 A	< 21 A	< 19 A	< 16 A
6	< 34 A	< 30 A	< 27 A	< 24 A	< 21 A
10	< 46 A	< 40 A	< 36 A	< 33 A	< 28 A
16	< 62 A	< 54 A	< 49 A	< 34 A	< 38 A
25	< 80 A	< 70 A	< 63 A	< 57 A	< 49 A
35	< 99 A	< 86 A	< 78 A	< 70 A	< 60 A
50	< 118 A	< 103 A	< 93 A	< 84 A	< 72 A
70	< 149 A	< 130 A	< 118 A	< 106 A	< 91 A
95	< 179 A	< 156 A	< 141 A	< 127 A	< 109 A
120	< 206 A	< 179 A	< 163 A	< 146 A	< 126 A

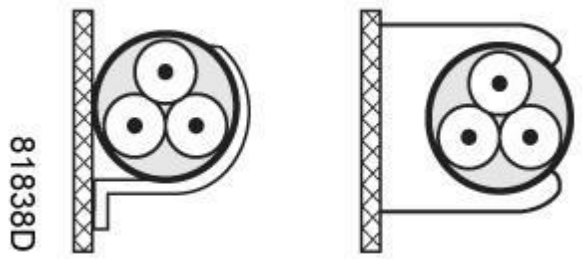	Installation method C according table B.52.1. Single-core or multi-core cable on a wooden wall

Maximum allowed current in function of the ambient temperature for installation method C.

Cable section mm²	Ambient temperature				
	30°C	40°C	45°C	50°C	55°C
4	< 32 A	< 28 A	< 25 A	< 23 A	< 20 A
6	< 41 A	< 36 A	< 32 A	< 29 A	< 25 A
10	< 57 A	< 50 A	< 45 A	< 40 A	< 35 A
16	< 76 A	< 66 A	< 60 A	< 54 A	< 46 A
25	< 96 A	< 84 A	< 76 A	< 68 A	< 59 A
35	< 119 A	< 104 A	< 94 A	< 84 A	< 73 A
50	< 144 A	< 125 A	< 114 A	< 102 A	< 88 A
70	< 184 A	< 160 A	< 145 A	< 131 A	< 112 A
95	< 223 A	< 194 A	< 176 A	< 158 A	< 136 A
120	< 259 A	< 225 A	< 205 A	< 184 A	< 158 A

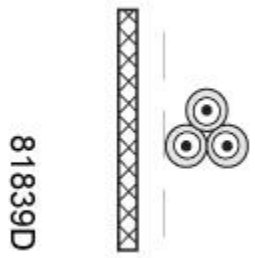	Installation method F according table B.52.1. Single-core cables, touching in free air Clearance to wall not less than one cable diameter.

Maximum allowed current in function of the ambient temperature for installation method F

Cable section mm²	Ambient temperature				
	30°C	40°C	45°C	50°C	55°C
25	< 110 A	< 96 A	< 87 A	< 78 A	< 67 A
35	< 137 A	< 119 A	< 108 A	< 97 A	< 84 A
50	< 167 A	< 145 A	< 132 A	< 119 A	< 102 A
70	< 216 A	< 188 A	< 171 A	< 153 A	< 132 A
95	< 264 A	< 230 A	< 209 A	< 187 A	< 161 A
120	< 308 A	< 268 A	< 243 A	< 219 A	< 188 A

Calculation method for IEC:

- Single supply cables (3 phases + PE - configuration (1)):
- Add 10 % to the total pump current (ItotPack or ItotFF from the tables)
- Install the prescribed fuse on each cable
- Parallel supply cable (2 x 3 phases + PE - configuration (2)):
- Add 10 % to the total pump current (ItotPack or ItotFF from the tables) and divide by 2
- Multiply the ampacity of the cables with 0.8 (see table A.52.17 (52-E1))
- Install fuses of half the size of the recommended maximum fuse size on each cable.
- When using 2 x 3 phases + PE as in (3):
- Add 10 % to the total pump current (ItotPack or ItotFF from the tables) and divide by √3
- Multiply the ampacity of the cables with 0.8 (see table A.52.17 (52-E1))

- Fuse size: the recommended maximum fuse size divided by √3 on each cable.
- Size of the PE cable:
- For supply cables up to 35 mm²: same size as supply cables
- For supply cables larger than 35 mm²: half the size of the supply wires

Always check the voltage drop over the cable (less than 5 % of the nominal voltage is recommended).
Example: Itot = 89 A, maximum ambient temperature is 45 °C, recommended fuse = 100 A

- Single supply cables (3 phases + PE - configuration (1)):
- I = 89 A + 10 % = 89 x 1.1 = 97.9 A
- The table for B2 and ambient temperature = 45 ° C allows a maximum current of 93 A for a 50 mm²cable. For a cable of 70 mm², the maximum allowed current is 118 A, which is sufficient. Therefore, use a 3 x 70 mm² + 35 mm² cable.
- If method C is used, 50 mm² is sufficient. (35 mm² for method F) => cable 3 x 50 mm² + 25 mm².
- Parallel supply cable (2 x 3 phases + PE - configuration (2)):
- I = (89 A + 10 %)/2 = (89 x 1.1)/2 = 49 A
- For a cable of 25 mm², B2 at 45 °C, the maximum current is 63 A x 0.8 = 50.4 A. So 2 parallel cables of 3 x 25 mm² + 25 mm² are sufficient.
- Install 50 A fuses on each cable instead of 100 A.

Cable sizing according UL/cUL
Calculation method according UL 508A, table 28.1 column 5: allowable ampacities of insulated copper conductors (75 °C (167 °F)).

Maximum allowed current in function of the wire size

AWG or kcmil	Maximum current
10	< 30 A
8	< 50 A
6	< 65 A
4	< 85 A
3	< 100 A
2	< 115 A
1	< 130 A
1/0	< 150 A
2/0	< 175 A
3/0	< 200 A

Calculation method for UL:

- Single supply cables (3 phases + 1 PE - configuration (1)):
- Add 25 % to the total current from the tables (see UL 508A 28.3.2: "Capacity shall have 125 % of the full load current")
- Install the prescribed maximum fuse on each cable
- Parallel supply cable (2 x 3 phases + 2 PE - configuration (2)):
- Add 25 % to the total current from the tables and divide by 2
- Multiply the capacity of the cables with 0.8 (see UL 508A table 28.1 continued)
- Install fuses of half the size of the recommended maximum fuse size on each cable.
- When using 2 x 3 phase + 2 PE as in (3):
- Add 25 % to the total current from the tables and divide by √3
- Multiply the capacity of the cables with 0.8 (see UL 508A table 28.1 continued)
- Fuse size: the recommended maximum fuse size divided by √3 on each cable.
- Size PE cable:
- For supply cables up to AWG8: same size as the supply cables
- For supply cables larger than AWG8: use maximum allowed capacity

< 100 A: Use AWG8
< 200 A: Use AWG6
< 300 A: Use AWG4

Always check the voltage drop over the cable (less than 5 % of the nominal voltage is recommended).
Example of supply cable calculation: Itot = 128 A, maximum ambient temperature is 45 °C, recommended fuse = 150 A

- Single supply cables (3 phases + 1 PE - configuration (1)):
- I = 128 A + 25 % = 128 x 1.25 = 160 A
- For AWG2/0, the maximum current is 175 A, which is sufficient => use AWG2/0
- Install the prescribed maximum fuse (150 A) on each cable
- Parallel supply cable (2 x 3 phases + 2 PE - configuration (2)):
- I = (128 A + 25%)/2 = (128 x 1.25)/2 = 80 A
- For a AWG4, the maximum current is 85 A x 0.8 = 68 A, which is insufficient. For an AWG3, the maximum current is 100 x 0.8 = 80 A. So 2 parallel cables of 3 x AWG3 + 2 x AWG8 are sufficient.
- Install 80 A fuses on each cable.

9 Instructions for use

Step	Action
1	Pump must be operated within the limits specified on the data plate.
2	No alterations must be made to this pump by welding, drilling or any other mechanical methods without the written permission of the manufacturer.
3	Use only oil as specified by the manufacturer.
4	The pressure and temperature of this vessel must be clearly indicated.

10 Declaration of conformity

Atlas Copco

EC DECLARATION OF CONFORMITY

We, Atlas Copco Airpower n.v., declare under our sole responsibility, that the product
Machine name *vacuum pump*
Machine type
Serial number

Which falls under the provisions of article 12.2 of the EC Directive 2006/42/EC on the approximation of the laws of the Member States relating to machinery, is in conformity with the relevant Essential Health and Safety Requirements of this directive.

The machinery complies also with the requirements of the following directives and their amendments as indicated.

Directive on the approximation of laws of the Member States relating to		Harmonized and/or Technical Standards used	Att' mnt
Machinery safety	2006/42/EC	EN ISO 12100 EN 1012 – 2	
Electromagnetic compatibility	2004/108/EC	EN 61000-6-2 EN 61000-6-4	
Low voltage equipment	2006/95/EC	EN 60034 EN 60204-1 EN 60439	
Ecodesign, energy-using products Ecodesign, energy-related products	2005/32/EC 2009/125/EC		X

The harmonized and the technical standards used are identified in the attachments hereafter

Atlas Copco Airpower n.v. is authorized to compile the technical file.

	Conformity of the specification to the directives	Conformity of the product to the specification and by implication to the directives
Issued by	Engineering	Manufacturing
Name		
Signature		
Date		

Form 6009 ■■■■ ■■
ed. xx.xxxx-xx-xx

Atlas Copco Airpower n.v. — Part of the Atlas Copco Group

Postal address: P.O. Box 100, B-2610 Wilrijk-Antwerp, Belgium, www.atlascopco.com
Visitors address: Boomsesteenweg 957, B-2610 Wilrijk-Antwerp, Belgium
Phone: +0032 (0)3 - 870 2111
Fax: +0032 (0)3 - 870 2443
Email: info@atlascopco.com
Registration n°: BE0403.992.231
For info, please contact your local Atlas Copco representative

p.1(17)

Typical example of a Declaration of Conformity document

On the Declaration of Conformity / Declaration by the Manufacturer, the harmonized and/or other standards that have been used for the design are shown and/or referred to.
The Declaration of Conformity / Declaration by the Manufacturer is part of the documentation that is supplied with this device.

Sustainable Productivity

We stand by our responsibilities towards our customers,
towards the environment and the people around us.
We make performance stand the test of time.

This is what we call - Sustainable Productivity

Atlas Copco AB
(publ) SE-105 23 Stockholm, Sweden Phone: +46 8 743 80 00
Reg. no: 556014-2720 www.atlascopco.com